HEAVYWEIGHT BOXING

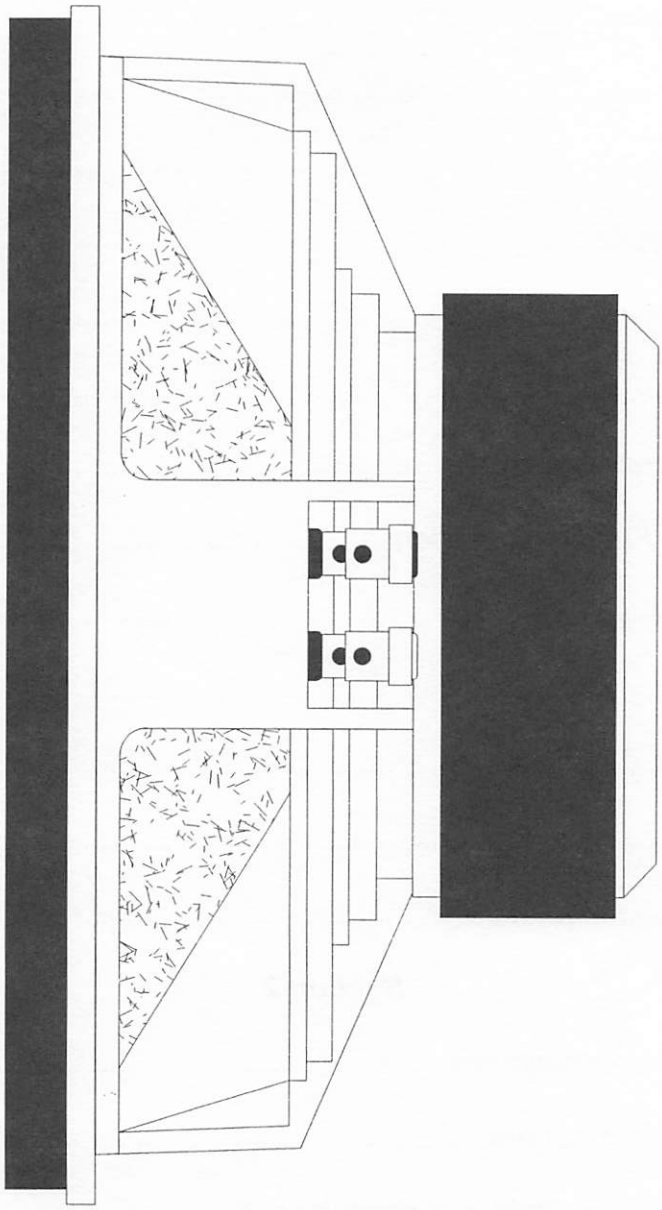

SOUNDSTREAM®

TECHNOLOGIES

HEAVYWEIGHT BOXING

Written by Glenn A. Stasky
CAD drawings and charts by Jim Oosterhuis

Table of Contents

Page

Section 1

Introduction 5

How we hear 6

How a speaker works 7-8

Woofers/Enclosure types 9-14

Thiele-Small parameters 15-17

Definitions 18

Sensitivity Vs. Efficiency 19

Power response Vs. Frequency response 20

Off-Axis response 21

"Fast" woofers 22

LSEQ 23-24

Compound drivers 25-26

Push-Pull designs 27-28

Section 2

How to design a compound system 29-30

How to create a Tri-chamber box 31

How to convert a round port into a rectangular port 32

Formulas, Conversions and other useful stuff 33

Drill and Tap Sizes 34

Soundstream Driver Dimensions 35

Page

Passive crossover charts 36

Technical chart 37

Component Speaker Systems Enclosure for Home 38

Electrical equivalents of loudspeakers 39

Major Discoveries 40-41

Enclosure / Port relationships 42

How to build a box 43

Calculating Net internal volume 44

Section 3

Universal tuning chart introduction 45

Universal tuning charts 46-63

Quick Reference Guide 64

Quick Reference Range charts 65

Quick Reference Volume chart (≤1.0 ft^3) 66

Quick Reference Volume chart (≤1.5 ft^3) 67

Quick Reference Volume chart (≤2.0 ft^3) 68

Quick Reference Volume chart (≤2.5 ft^3) 69

Quick Reference Volume chart (≤3.0 ft^3) 70

Quick Reference Volume chart (≤3.5 ft^3) 71

Quick Reference Volume chart (≤4.0 ft^3) 72

Quick Reference Volume chart (≤4.5 ft^3) 73

Quick Reference Volume chart (≤5.0 ft^3) 74

Quick Reference Volume chart (≤5.5 ft^3) 75

Page

Quick Reference Volume chart (≤6.0 ft³) 76

Quick Reference Volume chart (≤6.5 ft³) 77

Quick Reference Volume chart (≤7.0 ft³) 78

Quick Reference Volume chart (≤7.5 ft³) 79

Quick Reference Volume chart (≤8.0 ft³) 80

Quick Reference Volume chart (≤8.5 ft³) 81

Quick Reference Volume chart (≤9.0 ft³) 82

Quick Reference Volume chart (≤9.5 ft³) 83

Quick Reference Volume chart (≤10.0 ft³) 84

Quick Reference Volume chart (≤10.5 ft³) 85

Quick Reference Volume chart (≤11.0 ft³) 86

Quick Reference Volume chart (≤11.5 ft³) 87

Quick Reference Volume chart (≤12.0 ft³) 88

Section 4

CAD Drawings Introduction

SS-8 Enclosure designs

SS-10R Enclosure designs

SS-12R Enclosure designs

GR-8 Enclosure designs

GR-10 Enclosure designs

GR-12 Enclosure designs

GR-15 Enclosure designs

Biography and Suggested reading

SOUNDSTREAM®
TECHNOLOGIES

INTRODUCTION

This sub-guide has been developed to help you build great sounding subwoofer enclosures. Much thought has gone into the content, layout and design of this guide. Please read it carefully. There is a considerable amount of information that can help you select the correct design for your needs. The answers for most of the questions we are asked on the telephone are contained in this manual.

Many of the topics covered in this manual are a direct result of input from our dealers and customers. Our goal is to provide you with the most accurate information possible so that you may design the best enclosure for your application. If there is some additional information that you would like to see, please let us know. Fax or mail your suggestions to:

Sub-guide suggestions
c/o Soundstream Technologies
120 Blue Ravine Road
Folsom, Calif. 95630
fax: 916.351.0414

SOUNDSTREAM®
TECHNOLOGIES

HOW WE HEAR

The method in which we hear is very complex. Once you analyze the process, it is amazing that we can hear at all!

Today's most sophisticated acoustical test equipment pales in comparison to the processing capability of the human ear/brain. It would be far more difficult for a scientist to design a "man-made" hearing mechanism than to design a "bicycle-riding" robot.

The three main aspects of human sound perception are based on the following:

Direct Sound

The direct sound that first reaches our ear is the first clue to the presence of sound pressure. This first arrival is interpreted by the ear/brain as "what" we are listening to. Here, we determine what we are listening to, whether it is a cello or violin, an electric guitar or an electric bass. The brain processes the input and compares it to a vast library of sounds in the brain. If a match is made, we recognize the sound. If not, it is stored and remembered. The ability to "remember" and "store" is a learning function. We can improve upon it. This is why audiophiles usually upgrade their equipment. We get better at listening and need better equipment. A good location to experience only direct sounds is in an anechoic chamber. Here, there are no reflected sounds to speak of, only direct sounds. When we hear only the direct sounds, it is obvious that something is missing. A person that we know well and have heard many times sounds different in such a room. More information is needed to accurately interpret who is speaking.

Reflected Sound

The next sound we hear is the sound that reflects off of a nearby boundary, such as a floor, wall or ceiling. This is used to help us determine "where" the noise is relative to us. A VERY complex method of hearing determines our ability to position an object relative to our ears. The different phase, amplitude and arrival times are calculated instantaneously (OK, really fast) and our brain determines the location. This process is not linear with regard to frequency. Different frequencies are processed with different methods. As our ears are a given distance apart from each other, sounds may arrive at each ear at different times. This "delay" is measured and used to help position the sound. Because our ears are on opposite "sides" of our head, we are able to perceive Left to Right sounds better than Up and Down sounds. As an experiment, try turning your head 90, and listen to a Left to Right sound, you will have a more difficult time locating the sound.

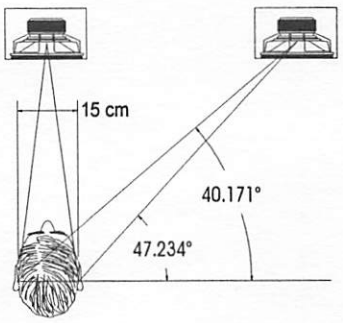

HORIZONTAL PLANE HEARING

Reverberant Sound

The third arrival (or arrivals) is interpreted as "what room" we are in. Here, thousands of reflections are processed in (again) a complicated manner. The main result is a map of the physical dimensions of the room we are listening in. Whether it is a small living room, concert hall or baseball stadium, the "reverberant" field is the key.

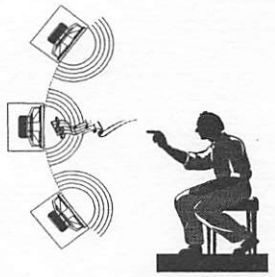
VERTICAL PLANE HEARING

HOW A SPEAKER WORKS

The process of producing sound from a collection of metal, paper, cloth, rubber and glue is an interesting one. If you remember back to high school science class when the subject of magnetism was discussed, the principles of speaker operation are really quite simple.

Fixed magnets, like the ones we are most familiar with, have two distinct ends. One end is called the North pole and the other the South. Each of these poles has a unique characteristic. When two "like" poles are placed near one another, they repel each other. For example, if two North poles of two magnets were to be placed near each other, they would repel each other and continue to do so. Conversely, if a North pole and a South pole were to be placed near each other, they would attract and stick together. Hence the saying "like poles repel, opposites attract". Keeping this in mind, if we were able to change the "polarity" of one of these magnets (switch North to South), we could switch between attraction and repulsion. Of course there is a way to do this or this paper would not be needed.

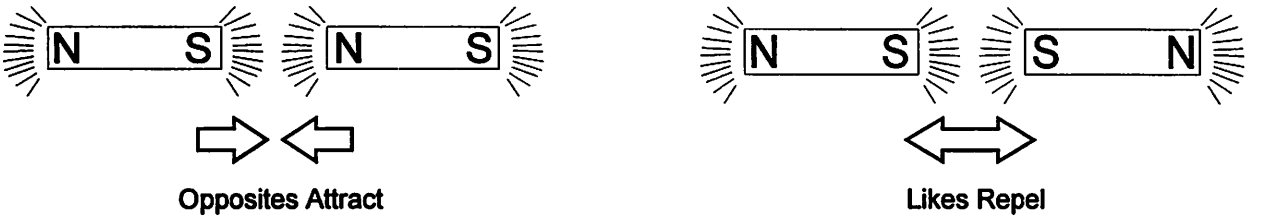

Simple Magnetism

Another important property of magnetism is its relationship to electricity. In that same high school science class I'm sure the topic of electricity came up. Possibly the experiment involving wrapping a wire around a pencil and connecting the two ends of the wire to a battery comes to mind. This little demonstration showed the relationship between electricity and magnetism. When the wires were connected to the battery, the pencil with the coil around it was able to pick up nails and other metal objects. When we apply electricity to the coil, a magnetic field is generated. Anytime electricity is produced or used, magnetism is generated. (This is often the cause of induced noise in an automobile). Once the battery was disconnected, the nails fell to the floor. This

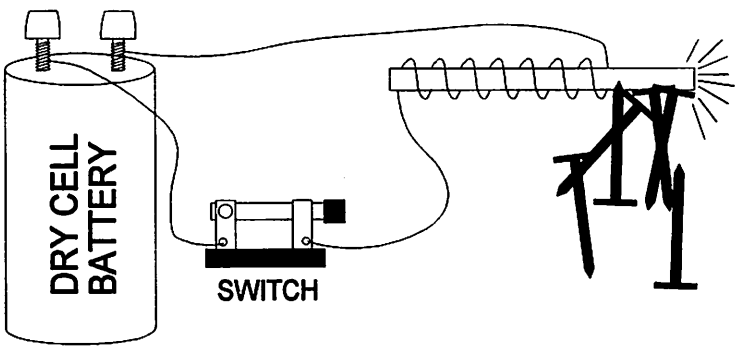

Simple Electromagnet picking up nails

demonstrates the presence of magnetism. In the experiment with the nails, the direction in which the wires were hooked up did not matter. The coil of wire still picked up the nails. Now if we were to use another magnet instead of a few nails, the "polarity" of the electrical hook-up would matter. If one end of the coil were to be placed near the fixed magnet and the coil then hooked up to the battery, the two would either attract or repel. It would depend on the magnetic polarity of the coil. Now if the electrical polarity were to be switched, the relationship between the coil and fixed magnet would now reverse. They would alternate between attraction and repulsion. This is the basis for all dynamic loudspeaker operation.

A speaker is essentially a coil of wire and a fixed magnet that work together to produce alternating motion. By attaching a radiating cone to the moving coil we are able to produce audible sounds. If the alternating electricity is varied at a specific rate or frequency, the sound produced is hopefully, the same frequency. Many factors affect how well the sound matches the input, but the basics are the frequency heard is the frequency of the alternating electricity put in. If the electricity varies at a rate of 100 times per second, the signal is said to be of 100 cycles or Hertz. This means the polarity switches back and forth between positive and negative 100 times per second. This is quite fast if you think about switching a light switch on and off with your hand 100 times per second. The human ear is said to hear frequencies as low as 20 Hertz and as high as 20,000 Hertz. When you stop and consider what it takes for a speaker coil to move back and forth 20,000 times in one second, it becomes apparent how difficult this really is. Obviously, the lighter the speaker's moving assembly, the faster it can move back and forth. It is apparent that an 18" diameter woofer cannot move at a speed of 20,000 cycles. Small, light tweeters are used in this range. In the middle frequencies, a driver sized in between is often used. By designating frequency bands, and developing speakers specifically for these bands, a better speaker can often be built. The speakers that we will concern ourselves with are those built for low frequencies, the woofers.

WOOFERS

Woofers come in many shapes and sizes, from a 4" bookshelf woofer, to a 72" outdoor concert system woofer. For most practical purposes, woofers vary from 6" to 18". Because woofers are designed for low frequencies, they operate more like air "pumps" than air vibrators. Woofers need to move air to produce low frequencies and they need a means to push this air. If you compare a low frequency speaker to an automotive engine piston, you can readily see that a piston outside of an engine cannot produce much energy. Not until the piston is installed in the cylinder sleeve does it become useful. The same holds true for low frequency speakers. If they are not installed in or used with some sort of baffle or enclosure, they are not as effective. There are some unique speaker designs that have been produced that do not use traditional enclosures, but these are not practical for most applications. There are various types of enclosures. the six most common types are described below.

ENCLOSURE TYPES

The six most common enclosure types are as follows:

- Infinite baffle
- Acoustic suspension
- Bass reflex (vented)
- Horn
- Bandpass
- Transmission line

Infinite Baffle

This is without a doubt the simplest type of enclosure. By utilizing a "baffle" board such as the rear deck of a car, we can isolate the front and rear output of the woofer. This is necessary to reproduce low frequencies. Another example of an infinite baffle would be a speaker mounted in the wall of a house. Infinite baffle is really a misnomer as the baffle only has to be sufficiently long enough to prevent cancellation of the lowest frequency required. If the ends of the box were to be folded back and connected forming a closed box, this too could be considered an infinite baffle. If this sealed enclosure is large enough so that it does not contribute to the springiness of the woofer, it is said to be an infinite baffle as well. Once the box size is reduced and adds to the springiness of the speaker, it becomes classified as an acoustic suspension design.

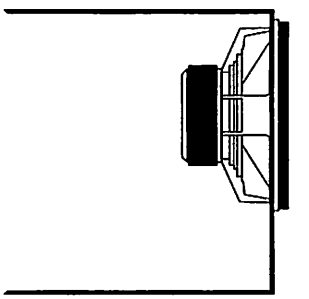

Infinite Baffle

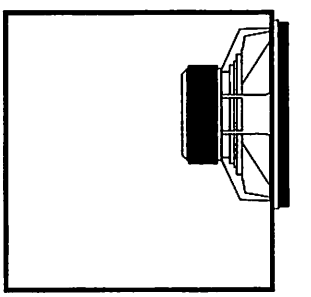

Acoustic Suspension

Acoustic Suspension

This type of enclosure is characterized by an internal volume of less than 1/3 that of the speaker's Vas specification. This means that when a box is used with a volume of 3 times or less than that of the speaker's compliance (VAS), the system

exhibits characteristics of an acoustic suspension system. Acoustic suspension systems possess traits such as good transient response and ease of construction. The low frequency response of both this type of enclosure as well as an infinite baffle enclosure fall off at a rate of about 12 dB per octave. This allows deep extension of bass even below the theoretical cutoff frequency. When infinite baffle or acoustic suspension enclosures are used in the automotive environment, a further extension of low frequencies is achieved due to the acoustic coupling of the interior. For example, by mounting small sealed enclosures in the rear corners of a hatchback, extremely low frequency response can be achieved. The Soundstream Granite Subwoofers work remarkably well in both infinite baffle and sealed enclosures.

Sealed Box Tuning

When designing and building sealed enclosures, there are a few variables that can be changed to modify a woofer's response. The first is box size. Anytime a woofer is installed in a sealed box, the resonant frequency of the woofer is increased. A box will present an air spring to the woofer thus causing a rise in the woofer's primary resonant frequency and an increase in the system's "Q". Q as described here, pertains to the resonance multiplier. In other terms, the higher the Q, the more a system is apt to resonate. High Q systems tend to sound "boomy". Some listeners may think a high Q system has more bass when in reality it may have a response peak in a narrow bandwidth. Larger boxes increase resonance and Q less but occupy more space. Smaller boxes tend to increase the Q and also raise the lowest frequency that the woofer can reproduce. The trick is finding the smallest box that fits your needs.

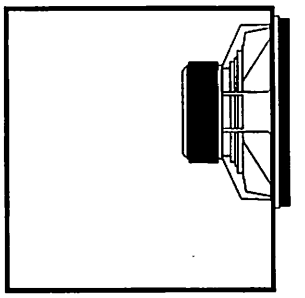

Sealed Box

A lower Q system tends to exhibit good damping characteristics while controlling resonance. This leads to a smoother, extended response. Q is difficult to predict as it is influenced by many factors. By adding filling material such as fiberglass, Dacron or wool, box Q can be lowered. The filling material has the effect of slowing down the rear acoustic wave off the woofer. This is achieved by partially changing the pneumatic spring action of the enclosure's air from adiabatic to isothermic. What this means is the fibers absorb the energy coming off the back of the driver and then later release it in the form of heat. As the energy is absorbed, it is slowed down. With a slower speed of sound comes shorter wavelengths that have the effect of making the enclosure seem larger. The filling material needs to be added in a semi-compressed manner. One often mentioned ratio for loose fiberglass is 1.5 pounds per cubic foot of enclosure space. Be sure to leave a breathing area directly behind the woofer so as to not restrict the air motion directly behind the woofer. One method of keeping stuffing material away from a woofer is to use a wooden brace or to staple nylon mesh across the inside of the enclosure. By experimenting with the quantity of stuffing material, different responses can be noticed. Too much stuffing material can overdo it. Start at 1.5 lbs. per cubic foot and then increase.

System Q

As mentioned earlier, there are many meanings of "Q" . By definition, "Q" is a factor determining the characteristics of a system's resonance. It is sometimes called the Quality factor. This may be misleading as a high "Q" does not necessarily mean high quality sound. Generally, a high "Q" system is one in which the resonance is not well dampened. With regard to speakers, a high "Q" is one with a total "Q" greater than 1.0. Many variables affect "Q". Mechanical, electrical and physical factors all add to the total "Q" of a system.

Speaker drivers have a "Q" of their own made up of electrical and mechanical factors. When we put a speaker in a box, the total "Q" will go up. The amount it goes up depends on many variables. When dealing with sealed boxes, a larger increase of "Q" occurs with a small box. Total system "Q" (Qtc) of speakers vary from about (.2) to (2) with (.2) being over damped and (2) being under damped. The main factors affecting total system "Q" are; woofer specifications, box size and box stuffing. "Q" can be adjusted by varying box size and stuffing. Soundstream has compiled data on many sealed designs and system "Q"s. The following is a brief description of various system "Q" traits.

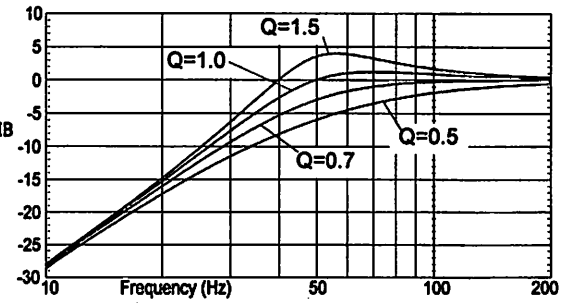

Various acoustical Q's

- Qtc =.5

Extremely tight bass. Low perceived level of bass. Not thought of as an efficient design as much of the bass energy is dampened. Very low frequency output can be realized with a low crossover point. Smooth response in upper frequencies makes for an excellent "mid-bass" design with good transient response.

- Qtc =.7

Good tight bass response. Compromise between very tight bass and strong bass. Good target response. Well balanced design. Common target for audiophile home speaker designs.

- Qtc =1.0

Strong perceived bass output. Good target for certain autosound applications. Some transient response is compromised for more bass output. As the transient overshoot is much too high, this design is best used for subwoofer applications only.

- Qtc= 1.5 and greater

Very boomy bass output. An inexperienced listener may think this type of response has lots of bass. This type of response is a good target for those who wish to vibrate mini-truck camper shells.

WOOFERS

Bass Reflex (vented)

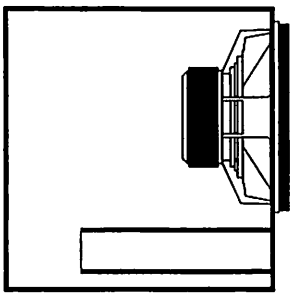

Vented Box

A bass reflex enclosure is one in which a tube is used to utilize some of the internal box energy and channel it out to be used to enhance the direct radiator's output. This idea dates back to the early 1930's with a patent granted to "A.C. Thuras". Over the years many improved methods of deriving the vent dimensions have been created. Not until "Richard Small" and "Neville Thiele" produced their papers has the idea of venting an enclosure been an easily understood concept. Today there is a relatively easy method of predicting vented box performance. "Thiele" and "Small" (T-S) produced a series of formulas and discovered relationships to help us determine our speaker's output even before we build a box. Using these formulas, we are able to forecast the performance of a given speaker driver/enclosure combination. Many methods exist for this forecasting.

The first method consists of using the original T-S formulas and graphs to hand calculate response predictions. This process consists of choosing a specific response "alignment". An alignment is a representation of a particular box/driver/tuning combination. This can be designated as a particular frequency response curve. This is a good place to start when learning about speakers as you soon get the feel for the mathematics and what is actually occurring. Many alignments exist. A dozen or so "famous" alignments are named after the mathematician/acoustician who derived and documented the response. Two of the most popular ones are "Butterworth" and "Chebychev". Various alignments have different characteristics, classifications and properties. It is beyond the scope of this introductory paper to discuss these alignments in detail. A list of suggested reading is given at the end of this paper to satisfy any learning desire.

Second, is to use a design table of one of the documented alignments. "Robert Bullock", who is known to many as both a mathematician and superb speaker designer, has given his interpretation of Small's work. he has computed a series of "design tables" that parallel certain responses. Using these tables greatly simplifies the math while still allowing an exploration of speaker principles. By using either of these methods, one not only derives good starting information, but also gains a better understanding of what is happening. This is especially important when one's final speaker box does not perform as well as expected!

Third, is to use one of the many available personal computer calculation programs. One must be aware of the possible pitfalls in using a computer to arrive at a suggested box. Many of these "computer programs" are really just glorified calculators with graphics. While these programs may give satisfactory looking results, they do not encompass enough variables to be reliable. As with any tool, its limitations must be remembered. In reality, there are hundreds of variables that can cause the actual response of a system to be quite different than that of the prediction. Another point to consider is these programs as well as the original T/S work are based on a speaker's response in a living room, not an automobile. The interaction between room response and speaker

performance is quite strong. Do not think the response shown on the screen is the response you will get in your car. Some advanced computer programs can model many of these variables and give more accurate results. With increased accuracy comes increased complexity. It is a good idea to fully understand the theory before using a computer to predict enclosure designs. This way if the design does not sound good, you will be able to go back and find out why.

Horn

Horn loaded subwoofer enclosures are not practical in the automotive environment because of their large size. It is important to mention them, as every woofer system installed in an automotive interior is subject to the laws of horn loading.

When a woofer is installed in the rear deck of an automobile, its output may be reflected by the rear window. In a hatch-back model, if the woofer is installed in the rear of the car, the reflection is caused by the hatch. This reflection can cause boosts and dips in the response of the woofer. In most cases the reflection is more apt to cause a boost. This boost is similar to the change in sound that is heard when a cheerleader shouts through a megaphone. Certain aspects of the voice are amplified by the horn of the megaphone. This causes a perceived change in his or her voice. A gradual rise in bass occurs. The same principle applies to the automobile hatch-back example. In addition to the "horn effect", the resonant frequency of the air in the car changes the souhd of the woofer as well. These changes are most noticed as a peak in the 80-200 Hz region. These frequencies correspond to the dimensions of the average automobile interior. Electronic crossover points may be "staggered" to help alleviate this response error. By introducing an electrical "dip" in the response, a more natural, flatter sound can be achieved. An example of this dip might be rolling off the woofer's high end response at 75 Hz and rolling off the midrange's low end response at 180 Hz.

Bandpass

Bandpass enclosures, (sometimes called "7th or 6th order enclosures"), have been around for some time now. The first documentation goes back to the 1950's. A bandpass enclosure gets its name from the shape of its output response. A "band" of energy is produced with both its low end and high end response rolled off. Construction of a bandpass enclosure is unique in that the woofer's output is not directly radiating into

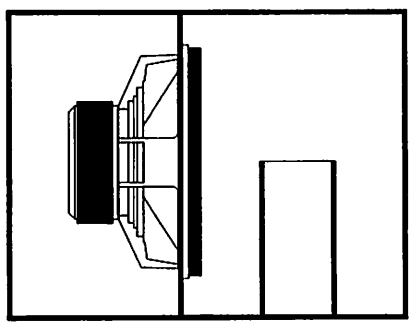

Sealed Bandpass

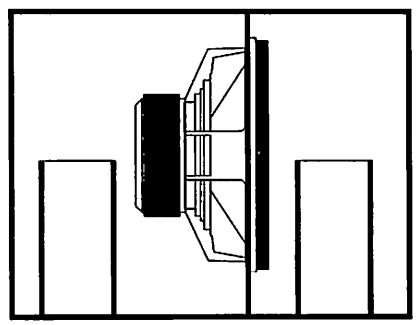

Vented Bandpass

the listening environment, it is via one or more "ports". One cannot actually see the woofer. Depending upon many variables, the output can be either wide, narrow or somewhere in between. The width of this energy can be tailored to produce some wildly different output responses. Hundreds of different response shapes can be made. It has been said that bandpass enclosures exhibit very high output potential. Compared to a properly designed vented enclosure, a bandpass enclosure can have more output in a limited band. This is the key. Bandpass enclosures retain a higher output potential over very narrow frequency ranges. It is very easy to build a bandpass enclosure with what is called "one note bass". The narrower the tuned band, the more output. This advantage can be 3-5 dB. Unfortunately, one cannot increase the output and widen the response. The laws of physics dictate that low frequency response and high output do not go hand in hand. One must choose between high output and low frequency response. A balance is required. Bandpass enclosures have their place. For high output sound systems that do not require the ultimate in really deep, precise bass, these enclosures are a novel way to achieve high output. Great complexity in this design type prevents even remotely accurate results with a calculator. Even advanced powerful computer simulations can fail to show problems. Because the woofer is concealed inside the enclosure and overload distortion cannot be easily heard, it is not unusual for woofers to be severely overdriven.

There are disadvantages to bandpass designs. Greater design and construction complexity prevent widespread use, difficult access to the woofer hinders serviceability and noise caused by the output ports can far exceed the output of the woofers. Bandpass enclosures tend to have underdamped response and higher distortion. Often higher output is achieved at the expense of higher distortion and poorer sound quality. Finally, bandpass enclosures are extremely sensitive to design and construction errors. If you wish to build a bandpass enclosure, follow the manufacturer's recommendations and be prepared for some experimentation.

Transmission line

Here is another type of enclosure that, while exhibiting some worthy traits, is just too large for use in automobiles. Transmission line speaker enclosures operate on a different principle than that of either sealed, vented or bandpass types. Transmission lines, when properly designed, dampen any driver resonance and "bleed off" any excess energy from the rear of the speaker. A long "duct" is constructed behind the speaker to channel the rear radiated energy away from the speaker. This duct is often very long and in order to work properly, must have a cross-sectional area equal to or greater than that of the woofer. A fifteen inch, 20 Hz transmission line enclosure would require a very large truck.

THIELE-SMALL PARAMETERS

Thiele-Small parameters are specifications referring to the characteristics of a speaker, most commonly, woofers. Australians, "Neville Thiele" and "Richard Small" brought to light a method of measuring and quantifying the characteristics of woofers so that they may be mathematically evaluated. The original work on vented loudspeaker theory dates back to 1932. Although many important works on the subject of vented loudspeakers have been produced, "Thiele" and "Small" seem to get the most credit. These specifications are called "Thiele-Small" parameters. What this meant to the loudspeaker industry was a breakthrough in the way in which speaker enclosures were designed. In 1973, "Richard Small" produced a series of papers on the subject that allowed many to predict the performance of their systems without ever having to turn on a wood saw.

It is important to remember that these methods are only predictions of a system's performance. Actual performance can and often varies from what the math says. This is because of the enormous amount of calculations involved in predicting the absolute response. Most of the calculator or personal computer programs available today can only consider a small number of these variables that affect the response of a woofer. The result of this is often an incorrectly predicted response. The math to accurately identify and model all of the important variables is staggering. These programs are useful if utilized as a tool to help derive the correct information and not relied upon as an absolute answer. Experience is necessary to interpret what is really the correct information. At Soundstream, we have the latest advanced computer modeling software, most of which is not available to the general public. This software, while not always "user-friendly", incorporates virtually all the variables common to the automotive environment. Variables that were not even imagined in the Thiele-Small papers can be introduced if desired. Many enclosures are predicted and then actually built and measured to verify accuracy. This produces designs that work in a higher number of applications and deliver the maximum performance for a given situation.

SOUNDSTREAM®
TECHNOLOGIES

Reference Series Thiele / Small Specifications

	SS-8	SS-10R	SS-12R
Freq. Response	40-500 Hz	32-500 Hz	33-500 Hz
Sens. 1w/1m	90 dB	90 dB	92 dB
Impedance (nom. z)	4 ohms	4 ohms	4 ohms
Rated Program Power	100 watts	200 watts	200 watts
Rated Peak Power	200 watts	300 watts	400 watts
Fs	40 Hz	35 Hz	35 Hz
Qts	0.370	0.376	0.476
Qms	2.16	8.8	8.475
Qes	0.450	0.393	0.504
Vas (ft^3)	1.06	1.80	4.00
Vas (liters)	30	51.0	113.3
Vas (m^3)	0.030	0.051	0.113
Cms (um/N)	416	329.8	283
DCR (ohms)	4.4	3.36	3.74
Levc (mH) @ 1 kHz	0.95	1.05	1.332
BL (Tesla m)	9.6	10.75	10.897
Sd (in^2)	34.8	54.3	86.7
Sd (m^2)	0.0220	0.0350	0.0531
Sd (cm^2)	220	350	531
X max one way (linear mm)	7.00	6.6	7.5
X max one way (peak mm)	17	22	25
Vd (linear cm^3)	157	231	398
Vd (peak cm^3)	380	770	1325
Vd (linear m^3)	0.000157	0.000231	0.000398
Vd (peak m^3)	0.000380	0.000770	0.001325
Mms (grams)	37.6	60	68
Magnet Assembly (oz.)	88	180	195
Magnet Weight (oz.)	40	86	86
Vf (volume of frame)	50 in^3	180 in^3	200 in^3
Coil (mm)	17	22.7	22.0
TP (mm)	8	9.5	9.5
Mounting Dia. (in)	$7\ ^1/_8$	$9\ ^1/_4$	$11\ ^1/_8$

SOUNDSTREAM®
TECHNOLOGIES

SPL Series Thiele / Small Specifications

• All specifications measured with the voice coils in parallel (2 Ohms)	SPL10	SPL12	SPL15	SPL160
Freq. Response	32-500 Hz	30-500 Hz	25-500 Hz	25-500 Hz
Sens. 1w/1m	92 dB	94 dB	95 dB	96 dB
Impedance (nom. z)	2 ohms	2 ohms	2 ohms	2 ohms
Rated Program Power	250 watts	300 watts	400 watts	800 watts
Fs	34 Hz	32 Hz	25 Hz	25 Hz
Qts	0.365	0.280	0.332	0.312
Qms	8.32	8.32	14.4	8.48
Qes	0.381	0.289	0.340	0.324
Vas (ft^3)	1.55	4.09	11.1	12.9
Vas (liters)	44	116	313	366
Vas (m^3)	0.044	0.116	0.313	0.366
Cms (um/N)	283	290	278	325
DCR (ohms)	1.74	1.84	1.78	1.90
Levc (mH) @ 1 kHz	1.12	1.137	1.303	0.667
BL (Tesla m)	8.67	10.45	11.02	10.83
Sd (in^2)	54.3	86.7	131.0	131.0
Sd (m^2)	0.0350	0.0531	0.0845	0.0845
Sd (cm^2)	350	531	845	845
X max one way (linear mm)	6.5	7.0	7.0	10.0
X max one way (peak mm)	18	20	22	22
Vd (linear cm^3)	228	372	592	845
Vd (peak cm^3)	630	1062	1859	1859
Vd (linear m^3)	0.000228	0.000531	0.000592	0.000845
Vd (peak m^3)	0.000630	0.001062	0.001859	0.001859
Mms (grams)	76.8	85.5	150.0	117
Magnet Assembly (oz.)	136	172	238	340
Magnet Weight (oz.)	42	63	104	156
Vf (volume of frame)	135 in^3	200 in^3	320 in^3	385 in^3
Coil length (mm)	23	24	26	31
Coil diameter (in)	2	2	2.5	3
TP (mm)	9.5	9.5	12.8	12.8
Mounting Dia. (in)	$9\ ^1/_8$	$11\ ^1/_8$	$13\ ^7/_8$	$14\ ^1/_8$
Mounting Depth (in)	$4\ ^5/_8$	$5\ ^3/_8$	$7\ ^1/_4$	$6\ ^7/_8$

SOUNDSTREAM®
TECHNOLOGIES

Granite Series Thiele / Small Specifications

	Granite Pro15mkII
Freq. Response	25-500 Hz
Sens. 1w/1m	92 dB
Impedance (nom. z)	4 ohms
Rated Program Power	300 watts
Fs	20 Hz
Qts	0.306
Qms	11.45
Qes	0.315
Vas (ft^3)	11.65
Vas (liters)	330
Vas (m^3)	0.330
Cms (um/N)	304
DCR (ohms)	3.50
Levc (mH) @ 1 kHz	1.0
BL (Tesla m)	16.427
Sd (in^2)	131.0
Sd (m^2)	0.0845
Sd (cm^2)	845
X max one way (linear mm)	6.25
X max one way (peak mm)	25.0
Vd (linear cm^3)	528
Vd (peak cm^3)	2112
Vd (linear m^3)	0.000528
Vd (peak m^3)	0.002112
Mms (grams)	162
Magnet Assembly (oz.)	179
Magnet Weight (oz.)	68
Vf (volume of frame)	275 in^3
Coil length (mm)	25.0
Coil diameter (in)	2.5
TP (mm)	12.5
Mounting Dia. (in)	14
Mounting Depth (in)	$6\ ^5/_8$

SOUNDSTREAM®
TECHNOLOGIES

Granite Pro Series Thiele / Small Specifications

	Granite Pro 8	Granite Pro 10	Granite Pro 12	Granite Pro 15
Freq. Response	40-500 Hz	37-500 Hz	33-500 Hz	25-500 Hz
Sens. 1w/1m	90 dB	92 dB	93 dB	92 dB
Impedance (nom. z)	4 ohms	4 ohms	4 ohms	4 ohms
Rated Program Power	100 watts	125 watts	150 watts	200 watts
Rated Peak Power	175 watts	200 watts	250 watts	300 watts
Fs	45 Hz	42 Hz	34 Hz	22 Hz
Qts	0.447	0.577	0.530	0.480
Qms	5.305	6.62	7.55	8.41
Qes	0.488	0.632	0.570	0.509
Vas (ft^3)	1.13	1.40	3.46	12.36
Vas (liters)	32	40	98	350
Vas (m^3)	0.032	0.040	0.098	0.350
Cms (um/N)	467.4	226	246	345
DCR (ohms)	3.2	4.2	3.3	3.19
Levc (mH) @ 1 kHz	0.811	0.80	0.70	0.65
BL (Tesla m)	7.05	10.54	10.51	11.60
Sd (in^2)	34.13	54.3	86.7	131.0
Sd (m^2)	0.0220	0.0350	0.0531	0.0845
Sd (cm^2)	220	350	531	845
X max one way (linear mm)	5.00	4.25	5.00	5.00
X max one way (peak mm)	18	21	18	21
Vd (linear cm^3)	110	203	451	507
Vd (peak cm^3)	396	735	956	1775
Vd (linear m^3)	0.00011	0.000203	0.000451	0.000507
Vd (peak m^3)	0.000396	0.000735	0.000956	0.001775
Mms (grams)	62	62	88	145
Magnet Assembly (oz.)	72	106	106	179
Magnet Weight (oz.)	32	38	38	68
Vf (volume of frame)	45 in^3	120 in^3	135 in^3	275 in^3
Coil (mm)	20	15.2	17.75	22.7
TP (mm)	6	9.4	9.4	10.5
Mounting Dia. (in)	7	9 1/8	11 1/8	14

SOUNDSTREAM®
TECHNOLOGIES

DEFINITIONS

To more fully understand what the Thiele-Small (T-S) parameters mean, the following is a list of the most common parameters and their brief definitions.

Fs- (Hz)- resonant frequency of driver in free-air. The resonance of any object is the frequency at which it tends to vibrate freely. An example of a resonance is the noise a soda bottle makes when you blow air across the top. The resonant frequency of the air in the bottle is the tone you hear.

Qes- driver electrical "Q"

Qms- driver mechanical "Q"

Qts- driver "Q" at resonance
"Q" is a complex term referring to the amplification of resonance. A high "Q" system is one in which the resonance is allowed or even boosted to a high level. A low "Q" level is one in which the resonance is suppressed or dampened.

Vas - (liters, cubic feet) - volume of air equaling driver compliance. Vas is the volume of air that has the same compliance or "springiness' of a speaker. A large Vas is one that has a soft suspension or one that equals a large volume of air.

Revc - (ohms) - DC resistance of driver voice coil.

Xmax - (mm) - maximum linear travel of voice coil. Xmax is an often misused term. It usually means the distance a voice coil can move in one direction before the coil moves away from the magnetic field. A common definition of Xmax is voice coil height minus air gap height, divided by two. Some manufacturers state the total peak-to-peak value as Xmax.

Vd - (cm^3) - total air displacement of driver. This is the amount of air the driver can move within its linear range. Vd = Xmax times Sd.

Vb - (Ft^3, in^3, liters) - net internal volume of box.

Mmd - (grams) - mass of moving system. This consists of coil, cone, 1/2 of the surround and the air load.

Sd - (cm^3) - effective surface area of cone. (Area = $radius^2$ times 3.1416).

Lvc - (mH) - this is the inductance of the voice coil, usually measured at 1000 Hz.

BL product - (Tesla Meters) - magnetic flux density per meter. Primary energy factor in a standard moving coil loudspeaker. The amount of energy provided by the magnet assembly and voice coil.

Impedance - (ohms) - Alternating Current Resistance of a circuit or a loudspeaker voice coil. This is similar to the resistance of a speaker measured at various frequencies. This is much more complex than the simple DCR. This is usually indirectly measured via a VOM in use with an audio signal generator, frequency counter and resistor. As many variables affect a speaker's impedance, test conditions need to be strictly controlled. Such variables are room noise, humidity, temperature, speaker condition and test equipment.

SOUNDSTREAM
TECHNOLOGIES

SENSITIVITY vs. EFFICIENCY

The terms "sensitivity" and "efficiency" are often confused. Sometimes they are even incorrectly interchanged. It is important to understand the differences. The two are defined as follows:

Sensitivity: This is the level of sound generated by a certain amount of input power measured at a given distance. Sensitivity is often specified as dB SPL measured at 1 meter on axis with 1 watt of input power. One watt is usually specified as a given voltage across the speaker's nominal voice coil impedance.

Efficiency: This is the total acoustic power from a loudspeaker relative to the total input power. As this is a ratio, efficiency is stated as a %. Efficiency encompasses all the radiated energy from a loudspeaker, not just the energy directly in front of the speaker.

Although two speakers may have the same sensitivity, one may sound louder in a room because of its higher efficiency. This higher efficiency may be due to the speaker's wider dispersion characteristic. The higher efficiency speaker transforms a higher % of the input power into acoustic power. It is important to remember that sensitivity is measured in dB SPL and efficiency is expressed in %.

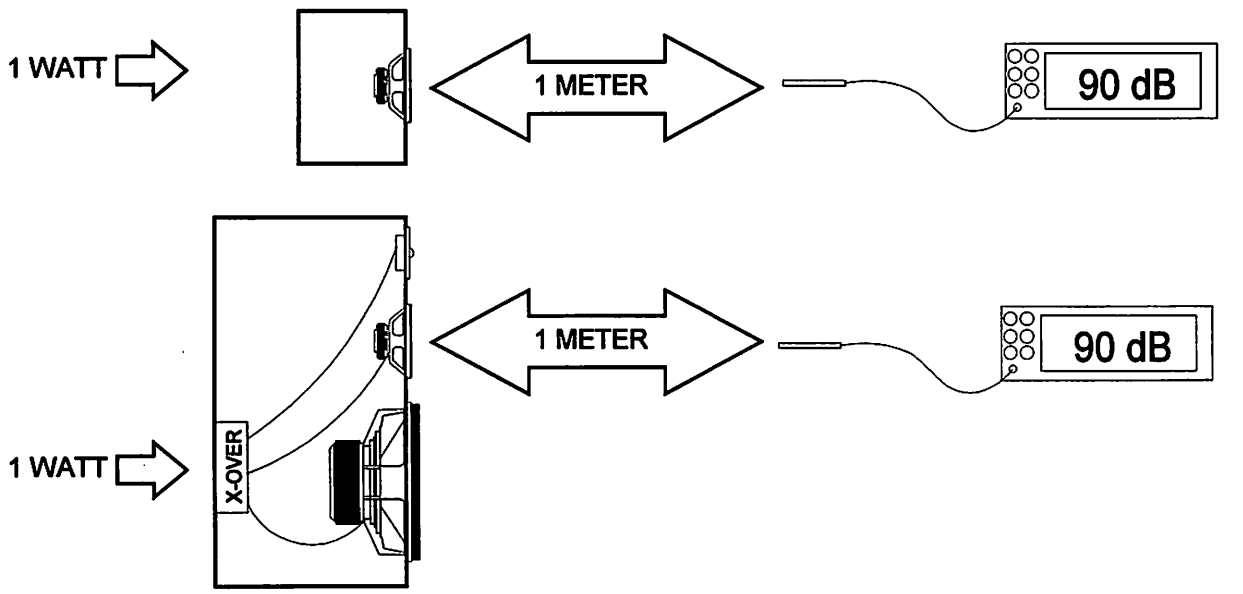

Even though both speakers have a sensitivity of 90 dB, the larger speaker's perceived loudness is greater. This is because usually an enclosure with larger cone area is more efficient at transforming electrical energy into acoustical energy.

SOUNDSTREAM®
TECHNOLOGIES

POWER RESPONSE vs. FREQUENCY RESPONSE

While the term "frequency response" is generally understood, "power response" is often not understood. It is important to differentiate between the two.

Frequency response refers to the energy (usually) measured directly in front of the loudspeaker. It is often measured 1 meter in front of the loudspeaker.

The term **power response** refers to the "total" radiated energy from a loudspeaker. This includes the off-axis energy as well as energy radiating backwards. Power response is measured with multiple microphones in different locations or with a single microphone in multiple locations.. Power response is a more accurate indication of what we hear with our ears. We hear the total energy radiated from a loudspeaker, not just the on-axis energy as indicated by frequency response.

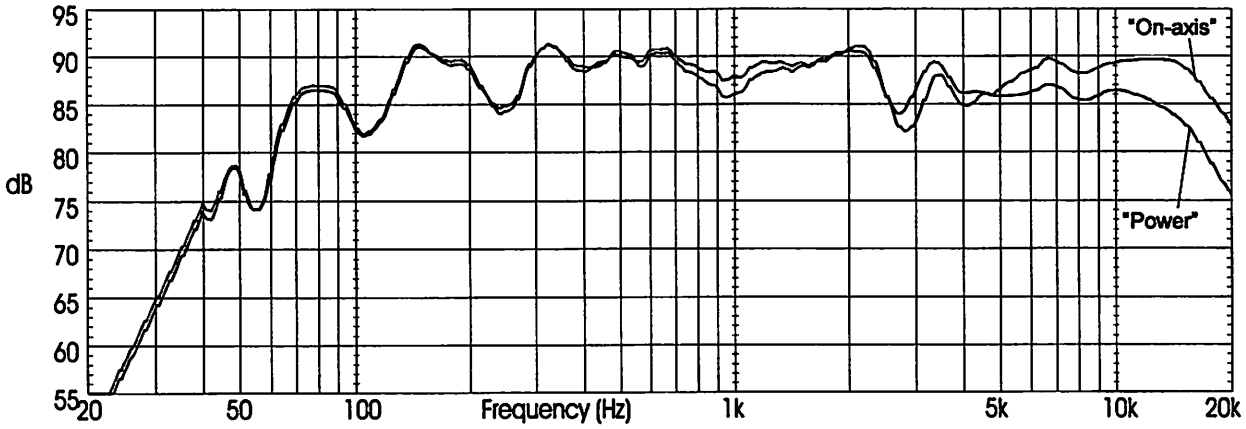

SOUNDSTREAM®
TECHNOLOGIES

OFF AXIS RESPONSE

What we mean by **off-axis** response is the energy radiated by the speaker system in a plane other than directly in front of the speaker.
Most speaker manufacturers (both home and car) publish frequency response graphs of their speakers measured in anechoic chambers (really quiet, refection free rooms). These rooms are totally void of any "signature" or reflections. The microphone is then placed directly in front of the speaker, usually 1 meter away. I do not know of a single person who listens 1 meter directly in front of their speakers. Nor do I know of a single person who listens to their speakers in such a room. What does this mean to us? The listening environment is of paramount importance to the performance of the loudspeaker. While the anechoic chamber is a useful tool, it does not indicate the loudspeaker's performance in the intended listening environment. The loudspeaker designer must consider the listening environment into the design. In the case of car audio, the car's environment must be measured and introduced into the equation. Without this input, the speaker cannot possibly sound as intended. This holds true for all loudspeakers, for both high and low frequencies.

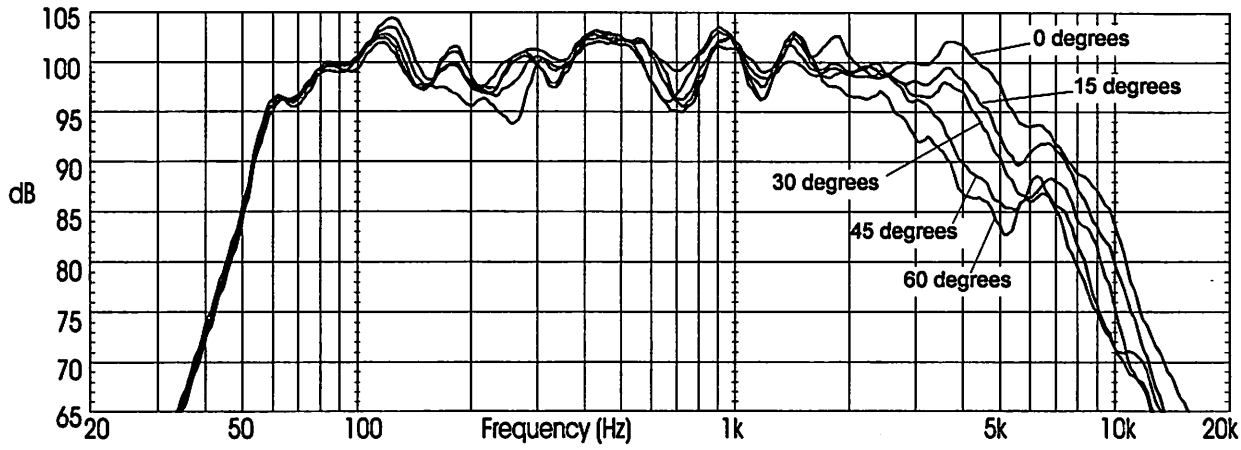

SOUNDSTREAM®
TECHNOLOGIES

"FAST" WOOFERS

Often the term "fast woofer" is used in the car and home audio industries. It is most always used in describing "tight, accurate bass" that has "punch and detail". While this is an admirable trait, the "speed" of bass is not in the woofers at all, but in the midrange/midbass driver! This does sound odd at first but the logic is as follows.

When you hear "sloppy, loose" bass, it can be caused by a variety of reasons. Take for example a kick drum beat. We would all agree that this drum produces sounds in the range of a subwoofer. And to listen to such a drum without a subwoofer would be disappointing. But if we dissect the actual sound of the drum and analyze the energy we would find that the first attack sound we hear is in the upper frequency range. In other words, the perception of "attack" is when the hammer first hits the drum skin. The energy here is quite high in frequency. The low frequency "foundation" that follows is from the resonance of the drum's air cavity. This happens at a point in time after the first sound. Without this initial drum skin hit, bass would sound like a loose boom. What is critical to reproducing a bass drum kick is the correct reproduction of both the skin attack and the low frequency resonance in the correct time, phase and amplitude. The leading edge of the energy contains information about the initial impulse. The following component of the energy contains the low frequency information. If you could electronically "dissect" the impulse and remove the leading edge, the sound would be indeed "mushy" no matter what size woofer was used. What this means to us is the size of the woofer is not important, the installation and crossover used are.

This is all theory and assumes that the woofer we are using is properly designed. Here lies the root of the problem. Many manufacturers utilize the components that are available and easy to purchase. This often means using the same motor structure (magnet, voice coil) on all sizes of woofers. If the same motor is used on a 15" as on a 8", the performance quality cannot be the same. Boomy sounding 15" woofers are common for this reason and why it is often believed that 8" woofers sound "faster" than 15" woofers. If a 15" is designed with the same parameters, it usually means MUCH bigger magnets and motor structure parts which become VERY expensive quickly.

As bass is essentially cone area times cone displacement, equal cone area and equal displacement means equal bass. Four (4) 8" woofers have approximately the same cone area as (1) one 15" woofer. Provided that the designs of each woofer and enclosure are of the same performance type, bass response should be the same. Speed is not in the woofers, but in the midrange. If two size woofers sound different, it is because of different designs. As a manufacturer, it is far easier to make a well designed 8" as compared to a well designed 15".

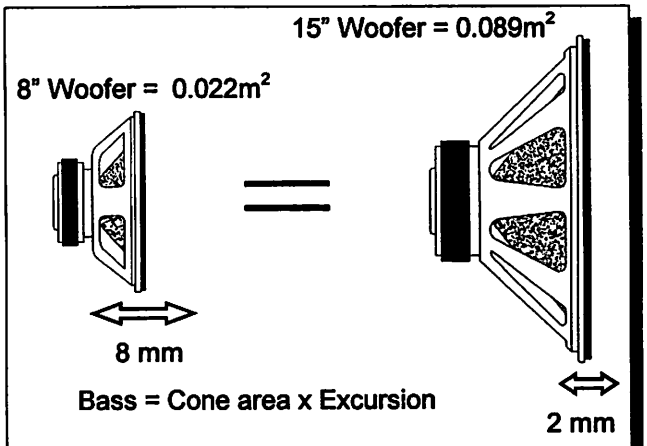

An 8" woofer has to move 4 times as far as a 15" woofer to reproduce the same amount of bass!

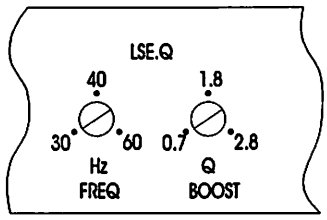

FIG. 1 LSE.Q

LSEQ Theory and use

LSEQ is a special subwoofer control circuit included with the SOUNDSTREAM REF 500 and CA 6.0 amplifiers. It is capable of removing subsonic energy in program material. The circuit consists of two controls. One adjusts the frequency of operation, and the other adjusts the range of boost. With both controls adjusted fully counter-clockwise, no boost is applied and the amplifier is flat in response down to 20 Hz.

The frequency control (Hz) adjusts the starting point of the subsonic filter. This High pass filter can be adjusted from 20 Hz up to a maximum of 60 Hz. This control is useful for setting the lowest frequency that your subwoofer will see. (See figure 1)

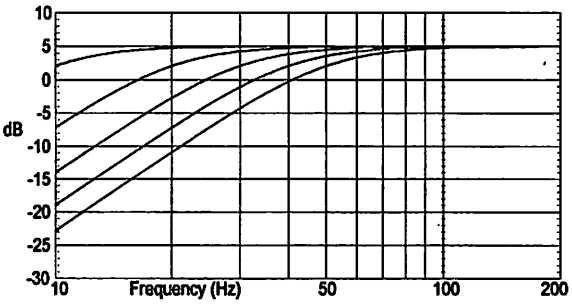

FIG. 2 Variable High Pass

The Q control adjusts the amount of boost applied at the set frequency. This is adjustable from .707 (flat) to 2.8 (+9 dB). (See figure 3) When the Q is set to .707 (Butterworth), LSEQ acts as a sub-sonic filter only. (See figure 2) The simple act of removing the signal below the vented tuning frequency can improve system output by as much as 3 dB. With Q values greater than .707, boost is added in addition to the sub-sonic filter. (see figure 6) This feature is useful for designing "Vented / assisted" enclosures. This type of box is similar to a standard vented enclosure with the following changes: smaller box, deeper bass, higher potential output.

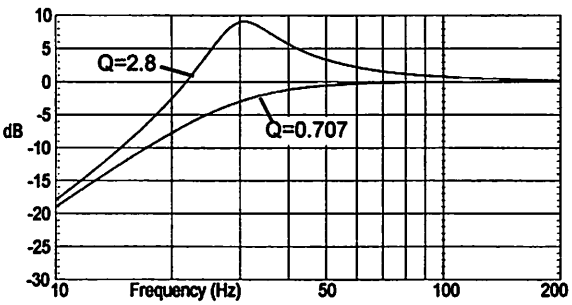

FIG. 3 Variable "Q"

Application

Woofers in vented enclosures have good power handling characteristics above the tuning frequency, but below the tuning frequency, power handling drops off considerably. This is due to the loss of any appreciable resistive air mass. At frequencies below resonance, the woofer starts to behave as if it were mounted in "free-air". If we wish to improve the performance of a vented system, we should remove these unwanted signals from our system. These can be removed by adding a subsonic filter. Figure 4 shows the effectiveness of

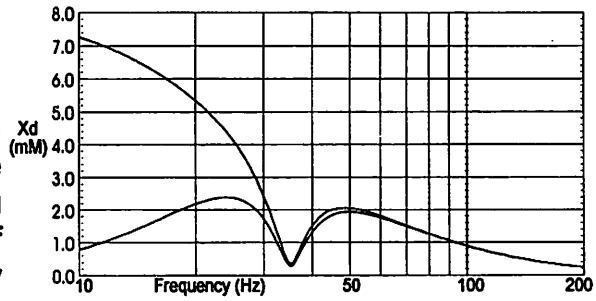

FIG. 4 Limited Excursion

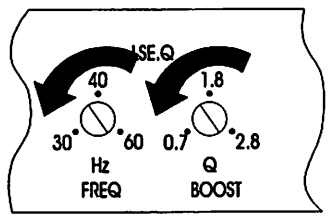

FIG. 5 LSE.Q Setting

LSEQ on woofer excursion. Woofer travel is 7.5 mm at 10 Hz, with LSEQ properly adjusted, this excursion can be reduced to less than 1 mm. This is of great benefit to lowering woofer distortion and increasing output.

Adjustment

An easy method of optimizing your existing subwoofer enclosure with LSEQ's "Hz" control is as follows.

- Adjust frequency and boost control to full CCW position. (See figure 5)
- While listening to music with strong bass content at a moderate level, slowly adjust frequency control clockwise. Listen for a reduction of bass response. Now, rotate frequency control slightly backwards. This serves the purpose of removing the "subsonic" bass energy.

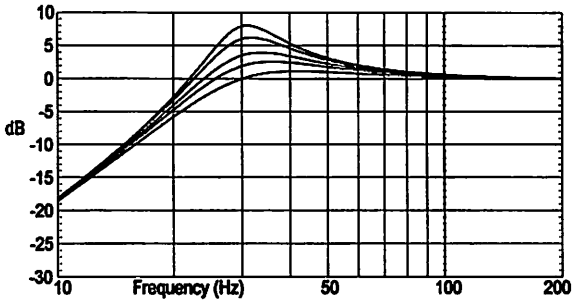

FIG. 6 Variable "Q"

LSEQ and Aperiodic type enclosures

There has been much interest in Aperiodic type enclosures recently (also called Membrane ™ enclosures). These enclosures have the advantages of little or no box, improved transient response and extended low frequency response. They consist of a resistive "membrane" mounted over the woofer and an active equalization box. The "membrane" may be made from a number of resistive materials such as fiberglass. The effect of the membrane is to "dampen" the woofer's resonance and improve transient response. The amount of improvement is based on a number of factors including the woofer, installation and of course, the car. The equalization box consists of an active circuit to boost and cut the signal to the woofers amplifier. The circuit is essentially a variable "Q" high-pass filter. (See figure 7)

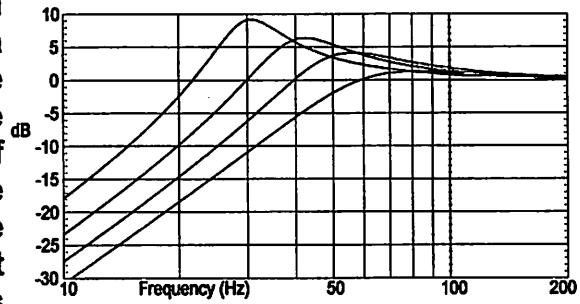

FIG. 7 Various Settings

Soundstream's LSEQ contains the same type of circuit with the added benefit of infinite adjustability. Our "Q" and "Hz" control can provide virtually any combination of boost and cut to suit your designs. So, LSEQ can provide the "tailoring" needed for any type of "assisted" design and any woofer.

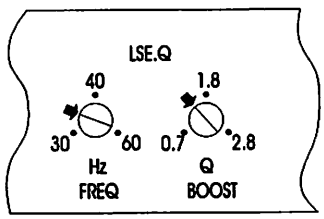

FIG. 8 LSE.Q Setting

=

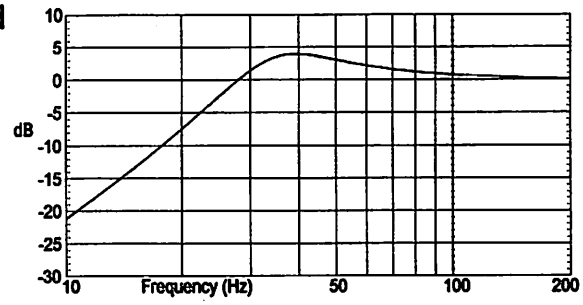

FIG. 9 Q=1.5, LSE = 35 Hz

SOUNDSTREAM®
TECHNOLOGIES

COMPOUND DRIVERS

In order to completely understand the concept of a "compound" driver, a few definitions are in order. There are a few names which have been applied to the compound driver. Some of them are: Isobaric, Constant Pressure and Composite.

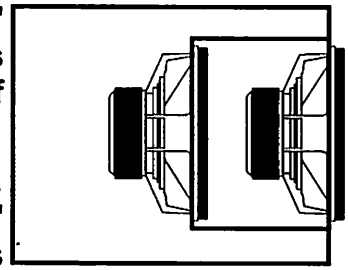

Cone to Magnet

These three terms basically all refer to the same thing. "Isobaric" is a Greek term for "constant pressure", "Iso" meaning "constant", "Baric" meaning "pressure". In this arrangement, the cavity between the two drivers theoretically is not pressurized by either driver, but kept in a constant pressure. As one driver moves forward, the other driver moves forward as well, keeping the pressure constant. The connecting chamber between the two drivers should be kept as small as possible. For the sake of simplicity, we will call any two drivers mounted in this configuration a single "composite" driver. This is useful when describing the total speaker assembly as well as performing computer simulations.

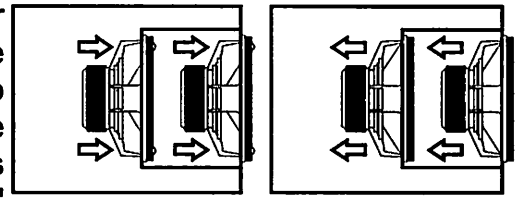

Constant Pressure

These terms all describe an arrangement in which two drivers are mounted together in either a "cone to cone", "magnet to magnet" or "cone to magnet" assembly. When two drivers are mounted in this configuration, several important things happen.

First, and most importantly, the driver's Vas (or acoustic compliance) is effectively halved. This has the benefit of allowing smaller box sizes for a given enclosure design. The enclosures that benefit the most are sealed type enclosures. This advantage is realized with vented enclosures also, but for enclosures that are already small (less than 1.5 ft^3) and have relatively low tuning frequencies, the port lengths required become exceedingly long with composite drivers.

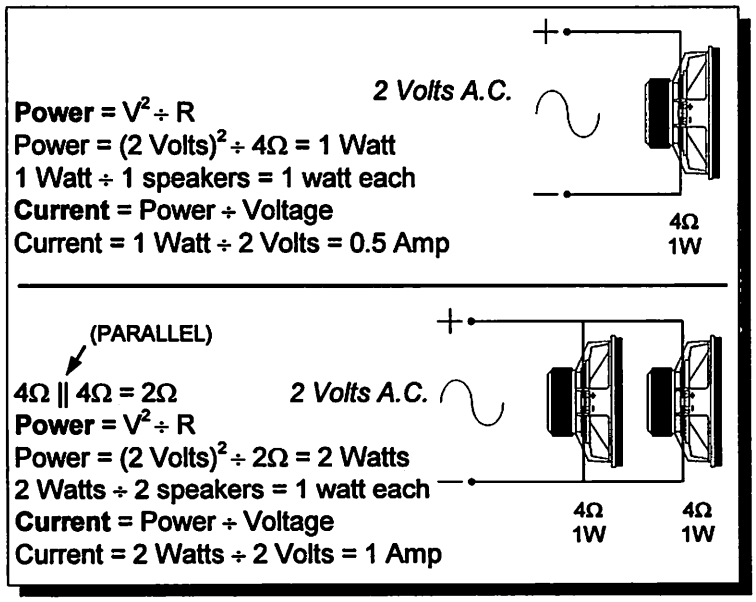

Power / Current relationships

Second, assuming the drivers are wired in parallel, the total effective impedance is exactly 1/2 that of a single driver.

Third, thermal power handling is doubled. The total power handling of the system may not be doubled because the mechanical power handling may be exceeded before the thermal limit is reached.

COMPOUND DRIVERS

Fourth, the sensitivity of a "composite" driver is equal to that of a conventional driver. This is assuming a constant input Voltage. The "Efficiency" of a "composite" driver is less because more power is required. Because the total impedance of a parallel connected composite driver is 1/2 that of a conventional driver, the load presented to the amp will be a lower impedance. The parameters that do change are the Vas (essentially halved) and moving mass (doubled). This configuration will require a higher amount of current from the amplifier. An amplifier capable of high current output will be helpful in this situation. Soundstream amplifiers with "High Power / High Current" switches will produce more power with higher efficiency when adjusted to the proper position than most other brands.

PUSH-PULL DESIGNS

A "Push-pull" subwoofer design is one in which two drivers are mounted either "cone to cone" or "magnet to magnet" and integrated into any type of enclosure. This enclosure can be a sealed, vented, infinite baffle, bandpass, or even transmission-line type. The "backwards" facing driver must be driven electrically with inverted polarity. The main benefit of this type of enclosure is a dramatic reduction of odd-order non-linearities. This reduces distortion as each driver is working in a different direction and cancellation of errors occurs. While one driver is pushing, the other is pulling. Also, because two motor assemblies are now controlling a single cone, better control of excursion is achieved.

When designing a "push-pull system, you must also use the "composite design rules as a "push-pull" is also a "composite". The simplest "P-P" design is one which the cones are bolted face-to-face. This is only useful for subwoofer applications, as when the magnet side of the driver is radiating out, midrange response suffers. Some studies have shown this occurs as low as 180 Hz. If a crossover point of 100 Hz or lower is used, no problems should be encountered.

The following should be considered when constructing a design using a "composite" driver:

- Qts remains the same
- Vas is halved
- Fs remains the same
- When two drivers are mounted either "cone-to-cone" or "magnet-to-magnet" (Push-Pull), be sure to reverse the polarity of the backwards facing driver. Little or no bass and possible driver damage may result if the drivers are not properly wired.
- If you a bolting two drivers "cone-to-cone", be sure the speakers' surrounds do no touch each other. An extra gasket or some sort of a wooden spacer may be required.

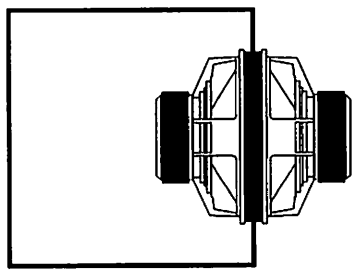

Cone-to-cone

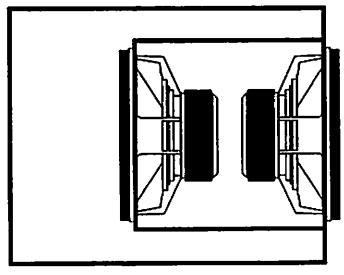

Magnet-to-magnet

Cone-to-cone requires a smaller box volume at the expense of a protruding magnet. Magnet-to-magnet allows for a flush-mounted outer driver at the expense of a larger internal volume requirement.

PUSH-PULL DESIGNS

- Another important and often overlooked consideration is vent length requirements of composite driver vented enclosures. When the Vas parameter is halved, one is easily lead to believe the same performance can be had in a box one-half the size. In theory this is correct. In practice it is true only for much larger boxes. Typically, when the box size of an alignment is halved, the vent length is increased by a much larger factor. What this means in the real world is when composite drivers are designed into small enclosures, extremely long vent lengths are required. This causes problems by:

    1) physical difficulty of positioning the long port
    2) increased volume requirement with a long port in a box
    3) audible side effects of a long port such as whistling and whooshing sounds.

  In general, small composite vented enclosures are not all they appear to be. It may be better to mount the units in a small sealed enclosure or even in a composite infinite baffle.

SOUNDSTREAM®
TECHNOLOGIES

HOW TO DESIGN A "COMPOUND" SUBWOOFER SYSTEM

The process of designing a "compound" system is not at all difficult. A few rules need to be followed to insure a successful design. Each of these rules are summarized below.

When two drivers are mounted either "cone to cone", "magnet to magnet" or "cone to magnet" the two drivers act as a single "composite" driver. This new driver has some new properties.

- Vas is essentially 1/2 that of one of the original drivers.
- Thermal power handling is doubled.
- Sensitivity remains the same.
- Efficiency is cut in half.
- Moving mass is doubled.
- Vented compound designs often require extremely long vents making them less desirable.
- "Cone to Magnet " vented designs are only practical with large box sizes.

Sealed Designs

1) Find the recommended enclosure size for your driver and divide this volume by 2.
2) Choose a mounting configuration (Magnet-to-Magnet, Cone-to-Cone or Magnet-to-Cone).
3) Design an enclosure with a volume behind the inner driver equal to the volume in item #1.
4) Be sure to follow the guidelines in "How to build a box".

Vented Designs

1) Find the recommended size enclosure and tuning frequency for your driver.
2) Divide the recommended volume by 2 (let's call this "new volume").
3) Look up the new volume on the "Universal Tuning Chart" (UTC).
4) Locate the recommended tuning frequency and suggested port length on the UTC.
5) If the port length is too long for your box, remember, a port does not have to be mounted inside a box. Also, a port can sucessfully use a bend or an elbow as well.
6) Some Vented Compound designs are just not practical. If this is so with your design, consider a sealed design.
7) Remember to subtract from the internal volume of your enclosure, the driver's volume, the port's volume and the volume of any internal braces.

SOUNDSTREAM®
TECHNOLOGIES

HOW TO DESIGN A "COMPOUND" SUBWOOFER SYSTEM
(Step-by-step example)

Example #1:

1) SS-12R simple vented enclosure (S12REN3): 3.0 ft^3 *Net* / 30 Hz with (1) 4" diameter x 7" port.
2) Divide the enclosure volume by 2: 3.0 $ft^3 \div 2 = 1.5\ ft^3$ *Net.*
3) Refer to 1.5 ft^3 on the "Universal Tuning Chart" (UTC), preferably under the "Lined" section. At 30 Hz, (1) 4" diameter port must be 17.5" long.
4) Recompute the box dimensions for 1.5 ft^3 taking into account the longer port.

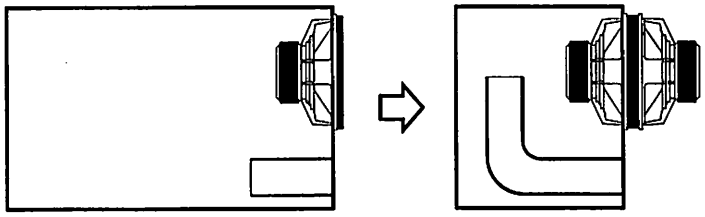

Vented to Iso-vented transformation

Example #2:

1) SS-10R sealed bandpass enclosure (S10REN6): Rear = 1.0 ft^3, Front = 1.0 ft^3 / 58 Hz with (2) 4" diameter x 12.75" ports.
2) Divide the Rear chamber volume by 2: 1.0 $ft^3 \div 2 = 0.5\ ft^3$ *Net.*
3) Divide the Front chamber volume by 2: 1.0 $ft^3 \div 2 = 0.5\ ft^3$ *Net.*
4) Refer to 0.5 ft^3 on the UTC, preferably under the "Lined" section. Here, we have a bit of a problem. At 0.5 ft^3 tuned to 57 Hz ($\cong$ 58 Hz) under the column for (2) 4" dia. ports, there is an "x". This indicated that the ports are greater than 30" long. Look left to the (1) 4" dia. port column. At 57 Hz, this reads 14.0" long. Now look further left to the (2) 3" dia. ports column. At 57 Hz, this reads 16.6" long. In this case, it is better to go with the (2) 3" dia. ports than the (1) 4" dia. port. This is demonstrated by the following:

   Cross-sectional area of a port = Area = π x (radius x radius); where π = 3.14159

   Area of (1) 4" dia. ports = π x (2 x 2) = $\underline{12.57\ in^2}$

   Area of (2) 3" dia. ports = 2 x (π x (1.5 x 1.5)) = $\underline{14.138\ in^2}$

The more cross-sectional area in the ports, the better. It is easy to see how port lengths can become unreasonable in small enclosures!

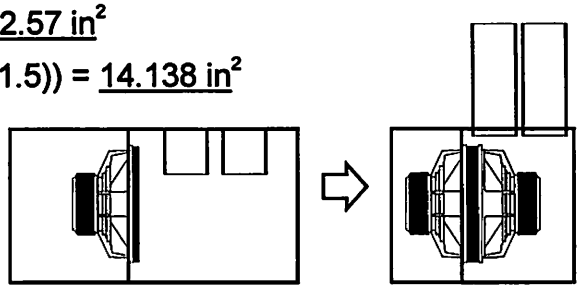

SBP to Iso-SBP conversion

SOUNDSTREAM®
TECHNOLOGIES

HOW TO CREATE A TRI-CHAMBER BOX

A "Tri-chamber" enclosure is really two single enclosures back to back with a common chamber. It is a simple matter to convert a standard enclosure into a "Tri-chamber". Let us say that you wish to make a "Tri-chamber" version of enclosure # 32, a Sealed Bandpass for the SS-10R (S10REN7, See figure 1) This enclosure has a rear (sealed) chamber with a volume of 1.2 ft^3 and a front (ported) chamber with a volume of 0.7 ft^3 tuned to 75 Hz. We can combine either the front or rear chambers. If we choose to use a common rear chamber, our work is very easy. Just double the rear chamber volume and build as figure 3 below.

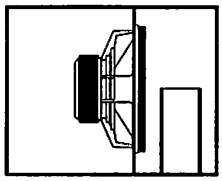

FIG. 1 Sealed Bandpass #32

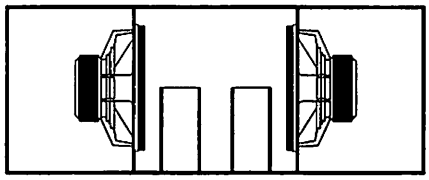

FIG. 2 SBP#32 Tri-Chamber Common Front Enclosure

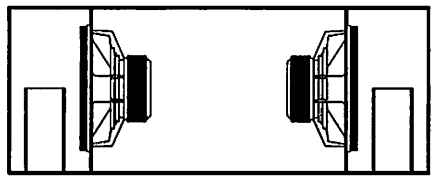

FIG. 3 SBP#32 Tri-Chamber Common Rear Enclosure

If we wish to combine the vented chambers, we will need to look at the combined volume of the center chamber and configure the ports to keep the tuning frequency the same (75 Hz). This is accomplished by looking up the new center chamber volume and finding the port size needed for tuning to 75 Hz. This may not always be the same as simply using twice the number of ports in a chamber twice the size. The effects of mutual port coupling and the non-linearity enter into the equation and alter results.

Step-by-step

1) Determine the volume you have available for your new enclosure. Use the formula Volume = (Length x Width x Depth) 1,728 = volume in cubic feet.
2) Select an enclosure that suits your needs.
3) Determine which side of the enclosure you wish to make "common". This side will have a combined volume and port arrangement. You will need to re-configure the ports with the "Universal Tuning Chart.

Example:

- Enclosure #32; (SBP) Rear = 1.2 ft^3 Front = .7 ft^3/ 75 Hz (2) 4" x 10.75" ports

  New configuration:
  End chambers = 1.2 ft^3 (x2), Middle chamber = 1.4 ft^3 / 75 Hz

Looking at the Universal Tuning Chart, Let's use 1.5 ft^3 enclosure volume on the "lined" page as this is very close to our 1.4 ft^3. Now, locate the 75 Hz tuning frequency. It is best to use as large a port as possible as this will minimize vent noise. If we use (2) 6" diameter ports, we see that we will need them to be 9" long each. This will duplicate the performance of the original box. (See figure 2.)

SOUNDSTREAM®
TECHNOLOGIES

HOW TO CONVERT A CIRCULAR PORT TO A RECTANGULAR PORT

There may be instances where, for cosmetic or design reasons, a rectangular port is desired. Let us say that you wish to convert to rectangular ports on enclosure #32, a sealed bandpass for the SS-10R (S10REN7). This is a fairly easy process, and in most cases the rectangular port will work as well as a circular port. As with circular ports, it is best to "round" the edges of the port with a router to produce the best air flow.

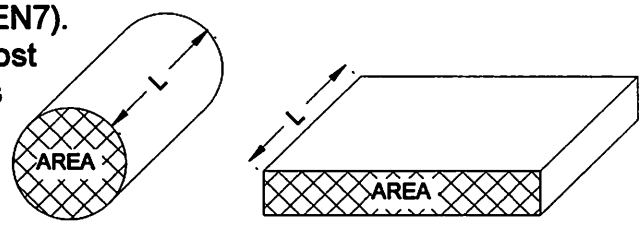

Circular and Rectangular ports

Step-by-step

1) Select a ported enclosure design that suits your needs; vented, sealed bandpass, or vented bandpass.
2) Compute the total internal cross-sectional area of the port(s). (Area = πr^2) This will be the same cross-sectional area for the rectangular port.
3) Determine the dimensions for the rectangular port so that the cross-sectional area is kept **constant**. (Area = L x W)
4) The new rectangular port will be the same length as the circular port and tune the enclosure to the same frequency.
5) Be sure to keep the *Net* internal volume of the enclosure constant by taking into account the space occupied by the new port and its wall thickness.

Example:

1) Enclosure #32; (SBP) Rear = 1.2 ft^3 Front = 0.7 ft^3 / 75 Hz with (2) 4" dia. x 10.75" ports
2) Cross sectional area of the ports: Area = πr^2 = $(3.141)(2)^2$ = 12.57 in^2 x 2 ports = 25.14 in^2.
3) Compute the dimensions of the rectangular port: 25.14 in^2 = 1" x 25.14" **OR** 2" x 12.57", etc.....
4) The new port will be 10.75" long, and will tune a 0.7 ft^3 *Net* internal volume enclosure, to 75 Hz.
5) Recompute the dimensions of the enclosure taking into account the space occupied by the new port and its wall thickness.

SOUNDSTREAM®
TECHNOLOGIES

FORMULAS, CONVERSIONS AND OTHER USEFUL STUFF!

Area of a Circle area = πr^2 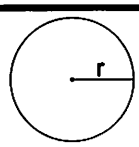	Area of a Triangle area = $^1/_2$ a x b 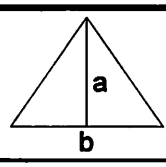	Area of a Square area = a^2 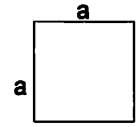
Area of a Rectangle area = L x W 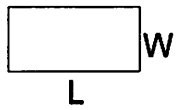	Area of a Rhombus area = a x h 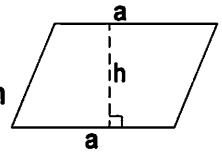	Area of a Trapezoid area = $^1/_2$(a+b) x h 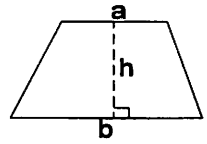
Volume of a Cube volume = a x a x a 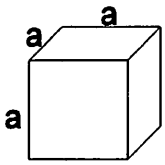	Volume of a Rectangular Box volume = LxWxH 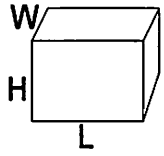	Volume of a Cylinder volume = πr^2 x L 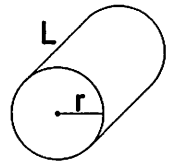

Inside Cross Sectional Areas of Ports		Piston Area Comparison of Woofer Cones		Occupied Volume of Ports (per inch of length)		
Port Inside Diameter (inches)	Port Area (inches^2)	Driver Size (inches)	Cone Area (inches^2)	Port diameter (inches)	Port wall thickness (inches)	Volume (per inch of port) (inches^3)
1	0.7854	4	8.58	1	0.125	1.227
2	3.141	5	13.88	2	0.125	3.97
2.5	4.908	6	19.5	2.5	0.125	5.94
3	7.069	8	34.32	3	0.125	8.29
4	12.57	10	51.48	4	0.250	15.9
5	19.63	12	82.68	5	0.250	23.76
6	28.27	15	138	6	0.250	33.18
8	50.27	18	202	8	0.250	56.75
12	113.09	-	-	12	0.250	122.72

Volume is measure in CUBIC units	1 millimeter = 0.0394 inches
Area is measured in SQUARE units	Speed of Sound = 1,127 feet per second
1 feet^3 = 28.32 Liters	Speed of Sound = 343 meters per second
1 feet^3 = 1,728 inches^3	π = 3.14159
1 Liter = 61.02 inches^3	To convert ft.^{3} to in.^{3}, multiply by 1728
To convert Liters to in.^{3}, multiply by 61.02	To convert in.^{3} to ft.^{3}, divide by 1728

SIZES TAP	DRILL	TAP / DRILL, FRACTION, DECIMAL, MILLIMETERS & GAUGE EQUIVALENTS												GAUGE NO.
		Fraction of Inch	Decimal of Inch	Decimal Millimeters	Fraction of Inch	Decimal of Inch	Decimal Millimeters	Fraction of Inch	Decimal of Inch	Decimal Millimeters	Fraction of Inch	Decimal of Inch	Decimal Millimeters	U.S. Standard (revised)
0-80	3/64													1 .2812
1-64	53	1/64	.015625	0.39688	17/64	.265625	6.74689	33/64	.515625	13.09690	49/64	.765625	19.44691	2 .2656
1-72	53					.27559	7.							3 .2391
2-56	50	1/32	.03125	0.79375	9/32	.28125	7.14376	17/32	.53125	13.49378	25/32	.78125	19.84379	4 .2242
2-64	50		.03937	1.								.7874	20.	5 .2092
3-48	47	3/64	.046875	1.19063	19/64	.296875	7.54064	35/64	.546875	13.89065	51/64	.796875	20.24067	6 .1943
3-56	46								.55118	14.				7 .1793
4-40	43	1/16	.0625	1.5875	5/16	.3125	7.93752	9/16	.5625	14.2875	13/16	.8125	20.6375	8 .1644
4-48	3/32					.31496	8.					.82677	21.	9 .1495
5-40	38	5/64	.078125	1.98438	21/64	.328125	8.33439	37/64	.578125	14.68440	53/64	.828125	21.03442	10 .1345
5-44	37		.07874	2.					.59055	15.				11 .1196
6-32	36	3/32	.09375	2.38125	11/32	.34375	8.73127	19/32	.59375	15.08128	27/32	.84375	21.43129	12 .1046
6-40	33					.35433	9.							13 .0897
8-32	29	7/64	.109375	2.77813	23/64	.359375	9.12814	39/64	.609375	15.47816	55/64	.859375	21.82817	14 .0747
8-36	29		.11811	3.								.86614	22.	15 .0673
10-24	26	1/8	0.125	3.1750	3/8	.375	9.52502	5/8	.625	15.8750	7/8	.875	22.2250	16 .0598
10-32	21								.629992	16.				17 .0538
12-24	16	9/64	.140625	3.57188	25/64	.390625	9.92189	41/64	.640625	16.27191	57/64	.890625	22.62192	18 .0478
12-28	15					.3937	10.					.90551	23.	19 .0418
1/4-20	7	5/32	.15625	3.96876	13/32	.40625	10.31877	21/32	.65625	16.66878	29/32	.90625	23.01880	20 .0359
1/4-28	3		.15748	4.					.66929	17.				21 .0329
5/16-18	F	11/64	.171875	4.36563	27/64	.421875	10.71565	43/64	.671875	17.06566	59/64	.921875	23.41567	22 .0299
5/16-24	I					.43307	11.							23 .0269
3/8-16	5/16	3/16	.1875	4.7625	7/16	.4375	11.1125	11/16	.6875	17.4625	15/16	.9375	23.8125	24 .0239
3/8-24	Q		.19685	5.								.94488	24.	25 .0209
7/16-14	U	13/64	.203125	5.15939	29/64	.453125	11.50940	45/64	.703125	17.85941	61/64	.953125	24.20942	26 .0179
7/16-20	25/64								.70866	18.				27 .0164
1/2-13	27/64	7/32	.21875	5.55626	15/32	.46875	11.90627	23/32	.71875	18.25659	31/32	.96875	24.60630	28 .0149
1/2-20	29/64					.47244	12.					.98425	25.	29 .0135
9/16-12	31/64	15/64	.234375	5.95314	31/64	.487375	12.30315	47/64	.734375	18.65316	63/64	.984375	25.00318	30 .0120
9/16-18	33/64		.23622	6.					.74803	19.				31 .0109
5/8-11	17/32	1/4	.250	6.3500	1/2	.500	12.700	3/4	.750	19.0500	1	1.000	25.4000	32 .0101
5/8-13	37/64					.5118	13.							33 .0093
3/4-10	21/32													34 .0086
3/4-16	11/16													

SOUNDSTREAM
TECHNOLOGIES

SOUNDSTREAM DRIVER COMPLETE PHYSICAL DIMENSIONS

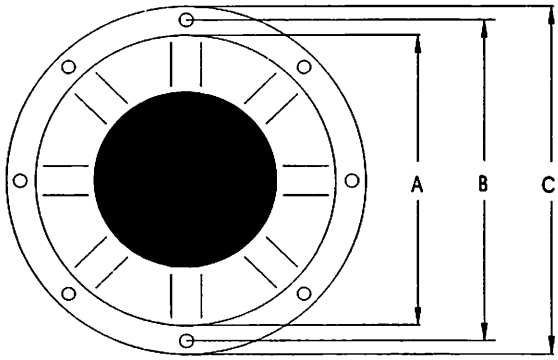

SOUNDSTREAM
SPEAKER
DIMENSIONS

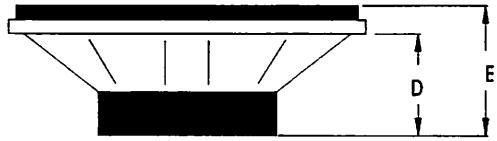

DIMENSIONS (INCHES ; MILLIMETERS)					
DRIVER	**A**	**B**	**C**	**D**	**E**
GR-Pro15mkII	14 ; 355.6	14 3/4 ; 374.7	15 1/8 ; 384.2	6 5/8 ; 168.3	7 1/4 ; 184.2
SPL10	9 1/8 ; 231.8	9 3/4 ; 247.7	10 1/8 ; 257.2	4 5/8 ; 117.5	5 1/4 ; 133.4
SPL12	11 1/8 ; 282.6	11 3/4 ; 298.5	12 1/4 ; 311.2	5 3/8 ; 136.5	5 7/8 ; 149.2
SPL15	13 7/8 ; 352.4	14 3/4 ; 374.7	15 1/8 ; 384.2	7 1/4 ; 184.2	7 3/4 ; 196.9
SPL160	14 1/8 ; 358.8	14 11/16 ; 373.1	15 1/4 ; 387.4	6 7/8 ; 174.6	7 1/4 ; 184.2

SOUNDSTREAM
TECHNOLOGIES

SOUNDSTREAM DRIVER COMPLETE PHYSICAL DIMENSIONS

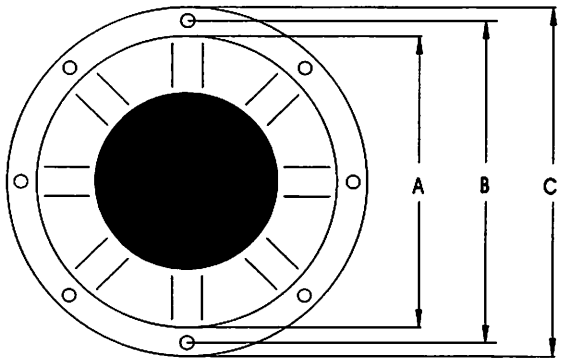

SOUNDSTREAM
SPEAKER
DIMENSIONS

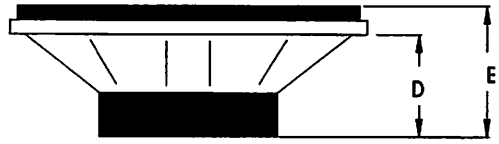

DIMENSIONS (INCHES ; MILLIMETERS)					
DRIVER	**A**	**B**	**C**	**D**	**E**
SS-1.0*	3 ; 76.2	N / A	3 3/8 ; 85.7	1 ; 25.4	1 1/8 ; 28.6
NT-1*	1 7/8 ; 47.6	N / A	2 1/8 ; 54.0	1/2 ; 12.7	7/8 ; 22.2
SS-4.0**	3 3/4 ; 95.3	4 3/8 ; 111.1	4 3/4 ; 120.7	2 1/8 ; 54.0	2 1/4 ; 57.2
SS-5.0**	4 3/8 ; 111.1	5 3/8 ; 136.5	6 ; 152.4	2 1/4 ; 57.2	2 9/16 ; 65.1
SS-5.1**	4 3/4 ; 120.7	5 1/4 ; 133.4	5 5/8 ; 142.9	2 3/8 ; 60.3	2 5/8 ; 66.7
SS-6.1**	5 3/4 ; 146.0	6 1/4 ; 158.0	6 5/8 ; 168.0	2 3/4 ; 70.0	3 ; 76.2
SS-8	7 1/8 ; 181.0	7 3/4 ; 196.9	8 1/4 ; 209.5	3 1/2 ; 88.9	4 1/4 ; 108.0
SS-10	9 ; 228.6	9 11/16 ; 246.0	10 3/16 ; 258.8	3 7/8 ; 98.4	4 1/2 ; 114.3
SS-10R	9 1/4 ; 235.0	9 3/4 ; 247.7	10 1/4 ; 260.4	4 7/8 ; 123.8	5 11/16 ; 144.5
SS-12	11 ; 279.4	11 5/8 ; 295.3	12 1/8 ; 308.0	4 3/4 ; 120.7	5 3/8 ; 136.5
SS-12R	11 1/8 ; 282.6	11 5/8 ; 295.3	12 3/8 ; 314.3	5 3/8 ; 136.5	6 3/16 ; 157.2
SS-15	14 ; 355.6	14 5/8 ; 371.5	15 1/4 ; 387.4	6 3/4 ; 171.5	7 ; 177.8
SS-18 Ltd.	16 1/2 ; 419.1	17 3/8 ; 441.3	18 1/4 ; 463.6	8 ; 203.2	8 1/4 ; 209.5
Studio-1 Tweeter*	2 1/16 ; 52.5	N / A	2 1/4 ; 57.2	11/16 ; 17.5	1 ; 25.4
P-51 Tweeter*	2 1/16 ; 52.5	N / A	2 1/4 ; 57.2	11/16 ; 17.5	1 ; 25.4
P-51 Woofer**	4 13/16 ; 122.2	5 1/2 ; 140.0	5 15/16 ; 150.8	2 1/2 ; 63.5	2 3/4 ; 70.0
P-61 Tweeter*	2 1/16 ; 52.5	N / A	2 1/4 ; 57.2	11/16 ; 17.5	1 ; 25.4
P-61 Woofer**	5 3/4 ; 146.0	6 1/8 ; 156.0	6 5/8 ; 168.3	2 3/4 ; 70.0	3 ; 76.2
B-52	4 13/16 ; 122.2	5 1/2 ; 140.0	5 15/16 ; 150.8	2 1/2 ; 63.5	3 ; 76.2***
B-65	5 3/4 ; 146.0	6 1/8 ; 156.0	6 5/8 ; 168.3	2 3/4 ; 70.0	3 1/8 ; 79.4***
B-69	L = 8 3/4 ; 228 W = 6 ; 158	L = 6 9/16 ; 167 W = 4 11/16 ; 118	L = 9 3/8 ; 238 W = 6 3/8 ; 162	3 1/4 ; 82.5	4 ; 101.6***
GRANITE-8	7 ; 177.8	7 7/8 ; 200.0	8 1/4 ; 209.6	3 3/4 ; 95.3	4 3/16 ; 106.4
GRANITE-10	9 1/8 ; 231.8	9 3/4 ; 247.7	10 1/4 ; 260.4	4 7/16 ; 112.7	5 ; 127.0
GRANITE-12	11 1/8 ; 282.6	11 3/4 ; 298.5	12 1/4 ; 311.2	5 1/8 ; 130.2	5 5/8 ; 142.9
GRANITE-15	14 ; 355.6	14 3/4 ; 374.7	15 1/8 ; 384.2	6 5/8 ; 168.3	7 1/4 ; 184.2

* => Driver dimensions measured from the bottom of the mounting cup to the top of the tweeter.
** => Driver dimensions measured without grille.
*** => Driver dimensions measured from the bottom of the woofer to the top of the tweeter, and without grille hardware.

PASSIVE CROSSOVERS

6 dB/octave Passive Crossover Chart

KEY

L = high quality (DCR < 1 Ohm) inductor/coil

C = non-polarized 50 Volts (or greater) capacitor

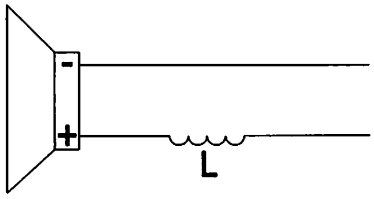

6 dB/octave Low Pass

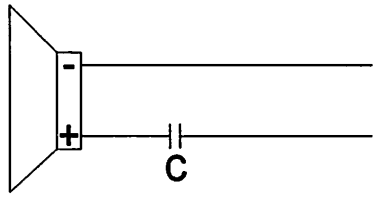

6 dB/octave High Pass

	2 Ohms		*4 Ohms*		*8 Ohms*	
FREQ	*L*	*C*	*L*	*C*	*L*	*C*
80 Hz	4.1 mH	1000 µF	8.2 mH	500 µF	16 mH	250 µF
100 Hz	3.1 mH	800 µF	6.2 mH	400 µF	12 mH	200 µF
130 Hz	2.4 mH	600 µF	4.7 mH	300 µF	10 mH	150 µF
200 Hz	1.6 mH	400 µF	3.3 mH	200 µF	6.8 mH	100 µF
260 Hz	1.2 mH	300 µF	2.4 mH	150 µF	4.7 mH	75 µF
400 Hz	0.8 mH	200 µF	1.6 mH	100 µF	3.3 mH	50 µF
600 Hz	0.5 mH	136 µF	1.0 mH	68 µF	2.0 mH	33 µF
800 Hz	0.41 mH	100 µF	0.82 mH	50 µF	1.6 mH	26 µF
1000 Hz	0.31 mH	78 µF	0.62 mH	39 µF	1.2 mH	20 µF
1200 Hz	0.25 mH	66 µF	0.51 mH	33 µF	1.0 mH	16 µF
1800 Hz	0.16 mH	44 µF	0.33 mH	22 µF	0.68 mH	10 µF
4000 Hz	0.08 mH	20 µF	0.16 mH	10 µF	0.33 mH	5 µF

12 dB/octave Passive Crossover Chart

KEY

L1 = high quality (DCR < 1 Ohm) inductor/coil

C1 = non-polarized 50 Volts (or greater) capacitor

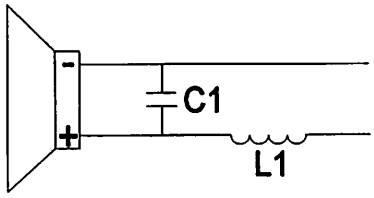

12 dB/octave Low Pass

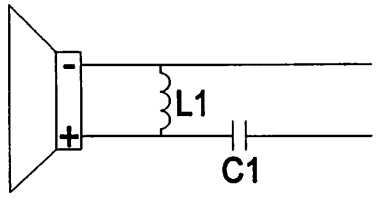

12 dB/octave High Pass

	2 Ohms		*4 Ohms*		*8 Ohms*	
FREQ	*L1*	*C1*	*L1*	*C1*	*L1*	*C1*
80 Hz	5.5 mH	680 µF	11 mH	330 µF	22 mH	180 µF
100 Hz	4.7 mH	560 µF	9.1 mH	270 µF	18 mH	150 µF
130 Hz	3.3 mH	400 µF	6.8 mH	200 µF	15 mH	100 µF
200 Hz	2.2 mH	300 µF	4.7 mH	150 µF	9.1 mH	75 µF
260 Hz	1.8 mH	200 µF	3.6 mH	100 µF	6.8 mH	50 µF
400 Hz	1.1 mH	150 µF	2.2 mH	68 µF	4.7 mH	33 µF
600 Hz	0.75 mH	100 µF	1.5 mH	47 µF	3.0 mH	26 µF
800 Hz	0.5 mH	68 µF	1.0 mH	33 µF	2.0 mH	15 µF
1000 Hz	0.47 mH	50 µF	0.91 mH	27 µF	1.8 mH	13 µF
1200 Hz	0.33 mH	44 µF	0.75 mH	22 µF	1.5 mH	11 µF
1800 Hz	0.27 mH	30 µF	0.50 mH	15 µF	1.0 mH	6.8 µF
4000 Hz	0.10 mH	15 µF	0.22 mH	6.8 µF	0.47 mH	3.3 µF

SOUNDSTREAM®
TECHNOLOGIES

TECHNICAL CHART

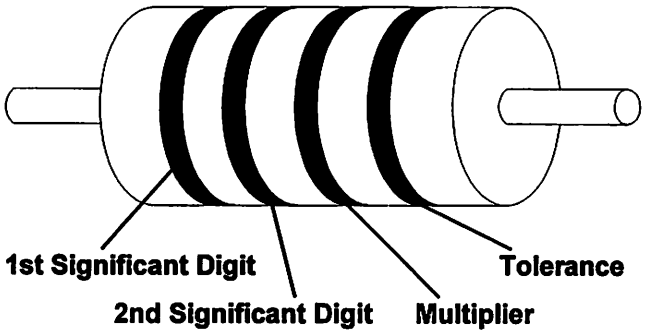

RESISTOR COLOR CODE CHART

Color	Significant Figures	Multiplier	Tolerance %
Black	0	1	
Brown	1	10	±1
Red	2	100	±2
Orange	3	1,000	
Yellow	4	10,000	
Green	5	100,000	
Blue	6	1,000,000	
Violet	7	10,000,000	
Gray	8	100,000,000	
White	9	1,000,000,000	
Gold	-	0.1	±5
Silver	-	0.01	±10

OHM'S LAW CHART

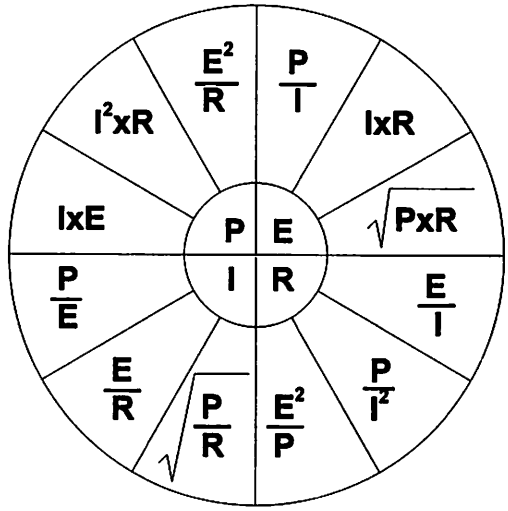

P=POWER
I=CURRENT
E=VOLTAGE
R=RESISTANCE

12 VOLT POWER POWER AND GROUND CABLE CALCULATOR

Recommended MINIMUM Gauge Size

TOTAL AMPERAGE DRAW OF SYSTEM	UP TO 4 FT.	4 TO 7 FT.	7 TO 10 FT.	10 TO 13 FT.	13 TO 16 FT.	16 TO 19 FT.	19 TO 22 FT.	22 TO 28 FT.
0 - 20	14	12	12	10	10	8	8	8
20 - 35	12	10	8	8	6	6	6	4
35 - 50	10	8	8	6	6	4	4	4
50 - 65	8	8	6	4	4	4	4	2
65 - 85	6	6	4	4	2	2	2	0
85 - 105	6	6	4	2	2	2	2	0
105 - 125	4	4	4	2	2	0	0	0
125 - 150	2	2	2	2	0	0	0	00

The above chart shows copper wire gauges to be used, if no less than a 0.5 volt drop is accepted. If aluminum or tinned wire is used, the gauges should be of an even larger size to compensate. Cable gauge size calculation takes into account terminal connection resistance.

SOUNDSTREAM®
TECHNOLOGIES

COMPONENT SPEAKER SYSTEMS ENCLOSURES
(for home use)

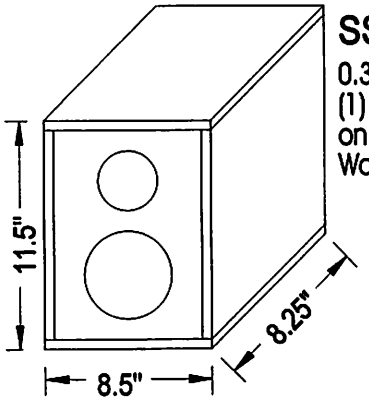

SS510
0.3 cubic feet / 55 Hz
(1) 2" dia. x 6" port
on the back wall.
Walls are 1/2" MDF

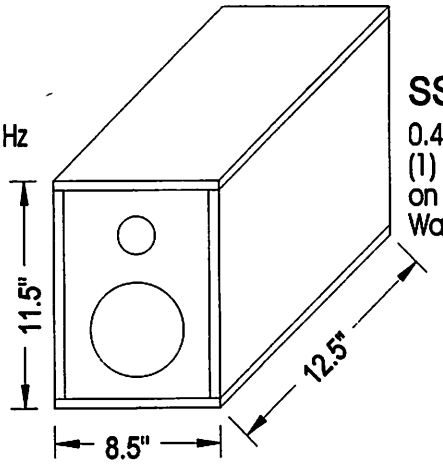

SS511
0.42 cubic feet / 55 Hz
(1) 3" dia. x 9.5" port
on the back wall.
Walls are 1/2" MDF

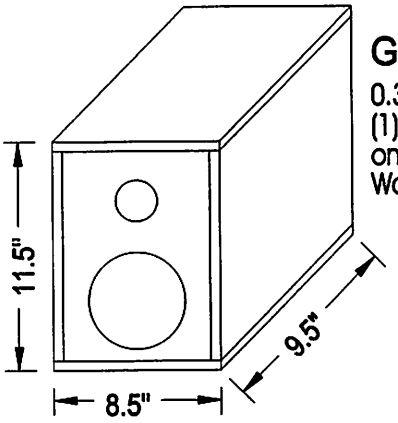

Granite P51
0.36 cubic feet / 55 Hz
(1) 2" dia. x 6" port
on the back wall.
Walls are 1/2" MDF

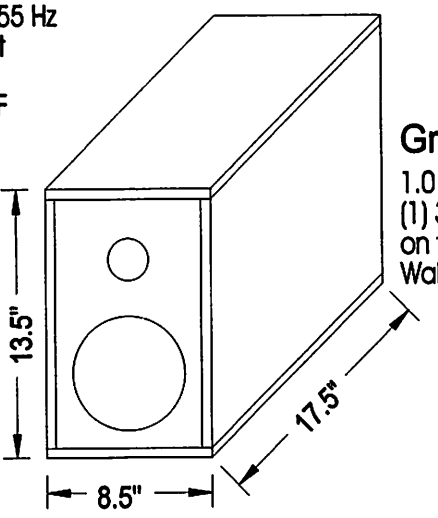

Granite P61
1.0 cubic feet / 44 Hz
(1) 3" dia. x 5.5" port
on the back wall.
Walls are 1/2" MDF

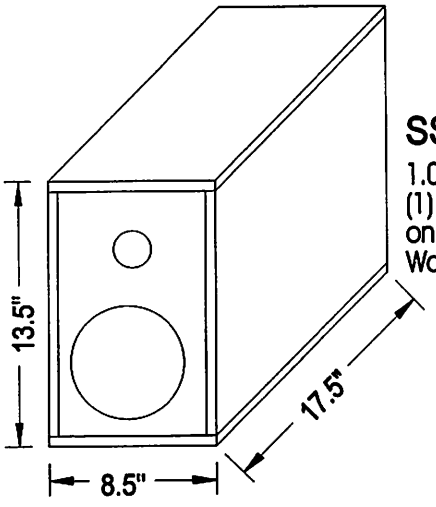

SS611
1.0 cubic feet / 45 Hz
(1) 3" dia. x 5.25" port
on the back wall.
Walls are 1/2" MDF

SOUNDSTREAM®
TECHNOLOGIES

ELECTRICAL EQUIVALENT OF A LOUDSPEAKER

Sealed Enclosure

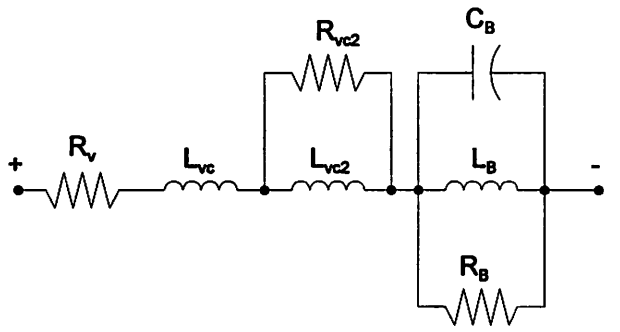

$R_B = Zmax - R_V$

$L_B = R_B / (Q_{mc} 2\pi F_c)$

$C_B = Q_{mc} / (2\pi F_c R_B)$

Infinite Baffle

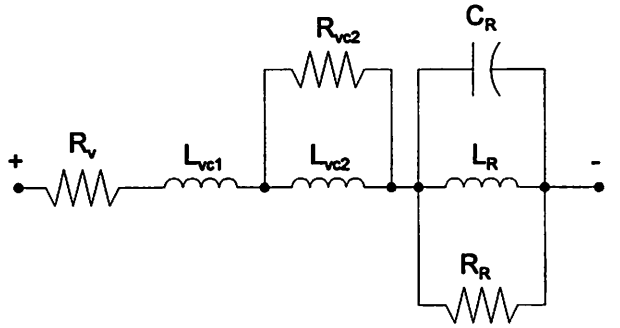

$R_R = Z_{max} - R_V$

$L_R = R_R / (Q_{ms} 2\pi F_S)$

$C_R = Q_{ms} / (2\pi F_S R_R)$

Vented Enclosure

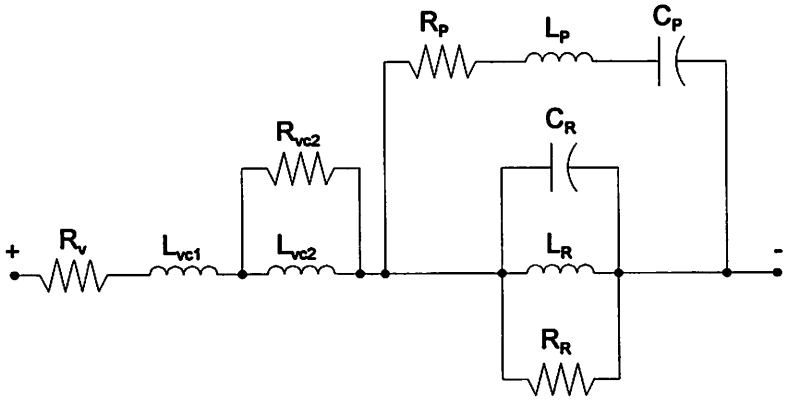

$C_P = 1 / (2\pi F_b R_V Q_P)$

$L_P = (R_V Q_P) / (2\pi F_b)$

$Q_P \cong 10$

Major Discoveries and Inventions in Electricity and Electronics

1745	capacitor: Leyden Jar	Musschenbroek
1747	positive and negative electricity postulated	Franklin
1767	inverse square law postulated	Priestley
	demonstrated 1785	Coulomb
1800	electric battery: voltaic pile	Volta
1808	atomic theory	Dalton
1820	Ampère's laws	Ampère
1821	thermoelectricity	Seebeck
1823	electromagnet: first made	Sturgeon
	improved 1831	Henry
1827	Ohm's law	Ohm
1831	electromagnetic induction	Faraday
1831	transformer	Faraday
1832	self-induction	Henry
1833	analytic engine conceived	Babbage
1834	electrolysis laws	Faraday
1845	Kirchhoff's laws	Kirchhoff
1847	magnetostriction	Joule
1855	gas-discharge tube: cold cathode	Gaugain
	low pressure 1856	Geissler
1860	microphone: diaphragm	J. P. Reis
	carbon-granule 1878	D. Hughes
1864	Maxwell's equations	Maxwell
1876	telephone	Bell
1876	cathode-rays studied	Crookes
1877	gramophone	Edison
1879	Hall effect	E. Hall
1880	piezoelectricity	P. & J. Curie
1887	electromagnetic waves (radio) first produced	Hertz
1887	aerial	Hertz
1887	photoelectric effect: observed	Hertz
	explained 1905	Einstein
1896	radio telegraphy: short distance	Marconi
	transatlantic 1901	Marconi
1897	electron discovered, proposed as constituent of all matter	J. J. Thompson
1897	cathode-ray oscilloscope	F. Braun
1898	magnetic recording: wire	V. Poulsen
	tape 1927	U.S. patent
1900	quantum theory	Planck
1901	ionosphere postulated	Kennelly, Heaviside
	demonstrated 1924	Appleton

Major Discoveries and Inventions in Electricity and Electronics *(continued)*

1904	thermionic valve: diode	J. A. Fleming
	triode 1906	de Forest
	tetrode 1926	H. J. Round
	pentode 1928	Tellegen & Holst
1906	radio broadcasting: first successful	Fessenden
	commercial 1919,20	U.K., U.S.
1911	atomic nucleus	Rutherford
1913	Bohr atom	Bohr
1923	television: electronic system (ionoscope)	Zworykin
	mechanical system 1926	Baird
	electronic system 1927	Farnsworth
	colour demonstrated 1928	Baird
1924	radar: first experiments	Appleton, G. Briet
	developed 1935-45	Watson-Watt
1924	wave mechanics	de Broglie, Born & Heisenberg
1926	Yagi aerial	H. Yagi
1929	television broadcasting: mechanical scanning	BBC
	electronic system 1936	BBC
1933	frequency modulation	E. H. Armstrong
1935	transistor, unipolar (FET): conceived	O. Heil
	produced 1958	S. Teszner, et al
1936	waveguide	various
1939	klystron	R. & S. Varians, W. C. Hahn
1939	magnetron	H. Boot
1939	computer: using valves	
	transistors 1956	
	integrated circuits 1964	
1948	transistor, bipolar: point contact & junction	Bardeen, Brattain & Schockley
1948	single crystal growth: germanium	G. Teal & J. Little
	silicon 1952	G. Teal & E. Buehler
1950	Soundstream amplifier designer Wade Stewart born	Betty & Craig Stewart
1952	integrated circuits: conceived	G. Drummer, et al
	produced 1960's	
1953	maser	C. Townes, et al
1956	diffusion process	C. Fuller & H. Reis
1958	Soundstream speaker designer Glenn Stasky born	Gai & Andy Stasky
1959	planar process	J. Hoerni
1960	logic circuits	
1962	communications satellite: Telstar	U.S.
1984	Soundstream is born!	

SOUNDSTREAM®
TECHNOLOGIES

Enclosure / Port Relationships

"As the total (*Net*) volume of an enclosure is **increased**, the port length must be **decreased** to maintain the same **Fb.**"
(assuming the same port I.D. is used)

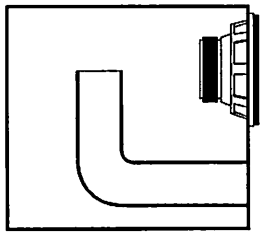

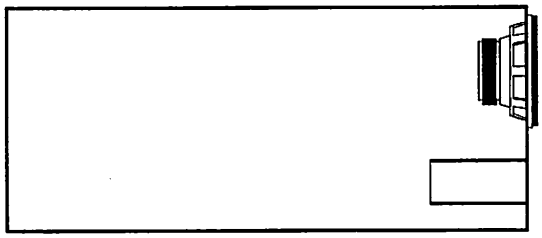

"As the total (*Net*) volume of an enclosure is **decreased**, the port length must be **increased** to maintain the same **Fb.**"
(assuming the same port I.D. is used)

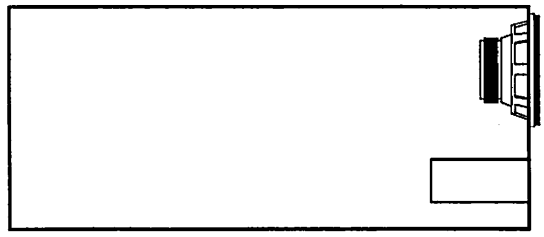

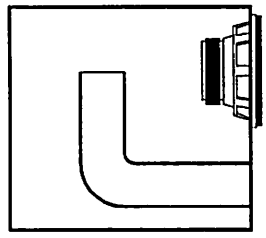

"As the total *area* of the port is **increased**, the port length must also be **increased** to maintain the same **Fb.**"
(assuming the same *Net* volume is used)

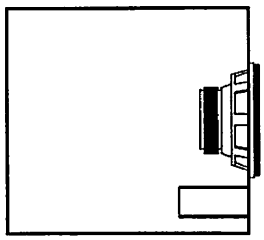

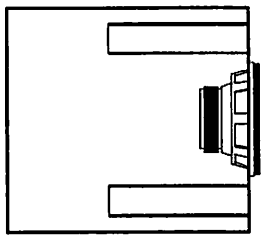

"As the total *area* of the port is **decreased**, the port length must also be **decreased** to maintain the same **Fb.**"
(assuming the same *Net* volume is used)

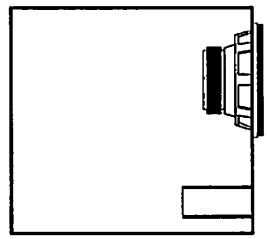

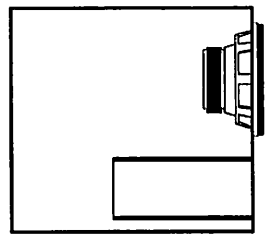

(*IMPORTANT*: None of the relationships described are directly proportional to one another. As an example; when the total area of the port is exactly doubled, the box size does not double accordingly.)

SOUNDSTREAM®
TECHNOLOGIES

How to build a box

- Decide on the correct dimensions of your enclosure.
- Be certain the box you have designed will fit into the location you have chosen. Sometimes making a cardboard box with the same outside dimensions is helpful. If this "dummy" box will not fit in the location, it is easy to recalculate your dimensions.
- Use 3/4" MDF particle board as a first choice in materials. 1/2" material is acceptable only if the proper bracing techniques are used.
- Double check all calculated panel dimensions. Remember the old woodworker's saying: "Measure twice, cut once."
- A quality table saw is recommended for all cutting requirements. A circular saw with a cutting fence is a suitable second choice. Under no circumstances should a "jig" or saber saw be used for cutting straight edges. If you do not have access to the proper cutting equipment, your local lumber yard may be able to do the cutting for you at a nominal charge. Accurate cuts make for a much easier job.
- To insure precise right angle gluing alignment, use a "T" square or suitable alternative.
- We recommend using a quality woodglue such as "Elmer's" woodworker's glue or "Weldwood". Use plenty of glue. Wipe up excess glue with a damp rag. To guarantee an airtight box, seal each inside joint with clear RTV silicone glue.
- Screw or "air-nail" panels together to insure a tight joint between panels. If using screws, it is essential to "pre-drill" and countersink the holes. An electric screwdriver is also quite useful here. Try rubbing each screw's threads on a wax candle. This dramatically increases the ease of turning in the screws.
- For vented boxes, staple 1" of fiberglass insulation to five of the enclosure's interior walls; skip the panel that has the driver mounted to it. For sealed boxes, try lightly stuffing fiberglass or an equivalent material into the enclosure. Use approximately 1 1/2 pounds per cubic foot. Be certain the material does not come into contact with the woofer frame or magnet.
- Use cross braces in any box that has large panel dimensions. When possible, utilize dividers between multiple drivers. As a general rule, do not design boxes with more than (2) drivers per chamber. Slight manufacturing variances between drivers can cause negative interaction. If more than (2) drivers are required, provide each woofer with a separate chamber within a main enclosure. This is almost always worth the extra work.
- When attaching drivers to the front panel, use the factory supplied gasket if available. Progressively tighten each of the screws to prevent frame distortion and to insure a consistent seal. Tighten each screw as you would a cylinder head of a car. Do not glue the driver to the board with adhesives as this may void the warranty.
- Use slide on type connectors to attach speaker wires. Do not solder wires to the provided terminals as this may cause damage to the factory wire connection. This may also void the speaker's warranty.

SOUNDSTREAM®
TECHNOLOGIES

Calculating Net Internal Volume

When constructing any type of enclosure, you must be aware that the (*Gross*) outside dimensions DO NOT represent the true (*Net*) volume inside. Such things as the woofers, ports, thickness of the enclosure material, dividing wall septums, and any internal bracing will reduce the total amount of the actual air space available. The following worksheet has been designed to provide you with the necessary steps to accurately calculate the absolute (*Net*) internal volume of any given enclosure.

Step 1. *Measure* the external dimensions of the enclosure and determine the thickness of the material used.
Step 2. *Double* the material wall thickness being used. Example: (2 x 0.75 in. = 1.50 in.)
Step 3. *Subtract* the material thickness from the **Width, Depth,** and **Height** to obtain the internal dimensions.
Step 4. *Multiply* the internal dimensions together to obtain the (*Gross*) **Sealed Enclosure Volume.**

	Width		**Depth**		**Height**
External Enclosure Dimensions	21.00 in.		6.00 in.		16.00 in.
Combined Wall Thickness	-1.50 in.		-1.50 in.		-1.50 in.
	19.50 in.	x	14.50 in.	x	14.50 in. = 4099.8 in.^{3}

Step 5. *Calculate* individual **-Volume of Frame (Vf.)*-** and *multiply* by the number of woofers being used. **(* Most manufacturers should have this information available...)**
Step 6. *Calculate* the volume of any dividing septums and/or cross and corner bracing that may be used.
Step 7. *Add* **woofer frame volumes, dividing septum volumes and internal bracing volumes together.**

Volume of Frame(s)	(2) x 50.0 in.	= 100.0 in.^{3}
Dividing Septum Dimensions	0.75 in. x 14.50 in. x 14.50 in.	= 157.6 in.^{3}
Left Chamber Brace Dimensions	9.37 in. x 2.00 in. x 4.00 in.	= 74.9 in.^{3}
Right Chamber Brace Dimensions	9.37 in. x 2.00 in. x 4.00 in.	= 74.9 in.^{3}
		TOTAL = 407.4 in.^{3}

Step 8. If the enclosure is to be **ported,** calculate the volume of each port as if it were a **solid cylinder. Remember:** *measure* only the length of the port that will extend into the enclosure. (*Internal* **port length x 3.14 x radius** " radius = 1/2 of O.D. " **squared = Volume of Port =** πr^2

Total Length of Port = 8.8 in.
Material Wall Thickness = -0.75 in.
8.05 in. x 3.14 x (1.625 in.)^2 = 66.7 in.^{3}
66.7 in. 3 x (2) ports = 133.5 in.^{3}

Step 9. *Subtract* the **total displaced volume** of the woofers, septums, bracing and ports from the (*Gross*) enclosure volume, and *divide* by the number of equal divisions within the enclosure to obtain the **Final** (*Net*) **Internal Volume.**

Volume of Frame(s) = 100.0 in.^{3}
Septum & Bracing Volume = 307.4 in.^{3}
Total Port Volume = 133.5 in.^{3}
(*Gross* Volume 4099.8 in.^{3}) *minus* 540.9 in.^{3} = 3,537.8 ÷ 2 = 1,779.5 in.^{3} = Final *Net* volume.

SOUNDSTREAM®
TECHNOLOGIES

UNIVERSAL TUNING CHART

INTRODUCTION

The *Soundstream Universal Tuning Charts* or *U T C* 's have been compiled as an aid to better understanding the specific relationships between enclosure size, tuning frequency and port length requirements for constructing vented, sealed bandpass, and vented bandpass subwoofer enclosures. To use the *U T C* 's, simply locate the enclosure volume you desire and find the row corresponding to the tuning frequency you are trying to match. For the best results (low port noise, quality output) we recommend that your port(s) have as much cross-sectional area as possible. This can be accomplished by choosing the port with the largest diameter, or multiple smaller ports. Base your selection on available port stock, enclosure depth, etc. An "X" on the *U T C* indicates a port(s) either longer than 30" or shorter than 0.75". If enclosure depth limits all port sizes available, it is possible to place a bend in the port. Use the center of the port bend when measuring your port length.

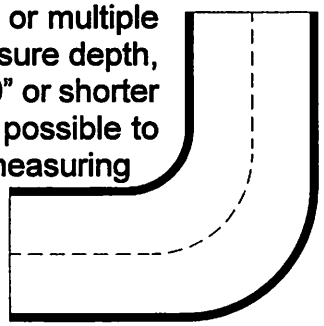

The *U T C* 's have been divided into two groups: lined and unlined. This indicates whether or not enclosure lining was used in computing the port length. We **strongly** recommend the use of insulation, as omitting this material will negatively affect the enclosure's final performance. An instance when you may want to omit the insulation might be for cosmetic purposes, as in building an enclosure out of plexi-glass. First, decide whether or not to use insulation, then take your readings off of the corresponding U T C. Be sure to use the correct chart, as port lengths differ from lined and unlined enclosures. If you decide to use insulation, the material should be a type of compressed fiberglass, and should be adhered to all interior walls except the driver'(s) mounting baffle. One suggested material is:

Radio Shack # 42-1082 *Acoustic Insulation*

SOUNDSTREAM TECHNOLOGIES

Universal Tuning Chart

June, 1994

Vented Enclosure Alignments (LINED!)

ENCLOSURE VOLUME	(Number of Vents) & I.D. / Inside Diameter LENGTH of VENTS							TUNING FREQUENCY
(cubic feet)	(2) 2 inch	(1) 3 inch	(2) 3 inch	(1) 4 inch	(2) 4 inch	(1) 6 inch	(2) 6 inch	(Fb)
0.5 ft.³								
	29.4"	X	X	X	X	X	X	30 Hz
	24.0"	26.6"	X	X	X	X	X	33 Hz
	21.1"	23.4"	X	X	X	X	X	35 Hz
	18.7"	20.6"	X	X	X	X	X	37 Hz
	15.7"	17.2"	X	X	X	X	X	40 Hz
	13.3"	14.6"	X	27.1"	X	X	X	43 Hz
	12.0"	13.1"	28.4"	24.5"	X	X	X	45 Hz
	10.9"	11.8"	25.8"	22.1"	X	X	X	47 Hz
	9.4"	10.1"	22.4"	19.2"	X	X	X	50 Hz
	8.1"	8.7"	19.7"	16.7"	X	X	X	53 Hz
	7.4"	7.9"	18.1"	15.3"	X	X	X	55 Hz
	6.8"	7.2"	16.6"	14.0"	X	X	X	57 Hz
	5.9"	6.3"	14.7"	12.3"	27.4"	X	X	60 Hz
	5.2"	5.4"	13.1"	10.8"	24.5"	26.9"	X	63 Hz
	4.8"	5.0"	12.1"	10.0"	22.8"	24.9"	X	65 Hz
	4.4"	4.5"	11.2"	9.2"	21.2"	23.2"	X	67 Hz
	3.9"	3.9"	10.0"	8.1"	19.1"	20.8"	X	70 Hz
	3.4"	3.4"	9.0"	7.2"	17.3"	18.7"	X	73 Hz
	3.1"	3.1"	8.4"	6.6"	16.2"	17.5"	X	75 Hz
	2.9"	2.8"	7.8"	6.2"	15.1"	16.3"	X	77 Hz
	2.5"	2.4"	7.0"	5.4"	13.7"	14.7"	X	80 Hz
0.75 ft.³								
	19.0"	21.0"	X	X	X	X	X	30 Hz
	15.4"	16.9"	X	X	X	X	X	33 Hz
	13.4"	14.7"	X	27.3"	X	X	X	35 Hz
	11.8"	12.9"	27.8"	24.0"	X	X	X	37 Hz
	9.8"	10.6"	23.5"	20.1"	X	X	X	40 Hz
	8.3"	8.9"	19.9"	16.9"	X	X	X	43 Hz
	7.4"	7.9"	18.0"	15.2"	X	X	X	45 Hz
	6.6"	7.0"	16.2"	13.6"	X	X	X	47 Hz
	5.6"	5.9"	14.0"	11.6"	26.2"	28.7"	X	50 Hz
	4.8"	5.0"	12.1"	10.0"	22.9"	25.0"	X	53 Hz
	4.3"	4.4"	11.1"	9.0"	21.0"	22.9"	X	55 Hz
	3.9"	4.0"	10.1"	8.2"	19.3"	20.9"	X	57 Hz
	3.3"	3.3"	8.8"	7.0"	17.0"	18.4"	X	60 Hz
	2.8"	2.8"	7.7"	6.1"	15.0"	16.2"	X	63 Hz
	2.5"	2.5"	7.1"	5.5"	13.9"	14.9"	X	65 Hz
	2.3"	2.3"	6.5"	5.0"	12.9"	13.7"	X	67 Hz
	1.9"	1.8"	5.7"	4.3"	11.4"	12.2"	28.5"	70 Hz
	1.6"	1.4"	5.0"	3.7"	10.2"	10.8"	25.7"	73 Hz
	1.4"	1.2"	4.6"	3.3"	9.5"	9.9"	24.1"	75 Hz
	1.3"	1.0"	4.2"	2.9"	8.8"	9.2"	22.5"	77 Hz
	1.0"	0.75"	3.7"	2.5"	7.9"	8.1"	20.4"	80 Hz

SOUNDSTREAM TECHNOLOGIES

Universal Tuning Chart

June, 1994

Vented Enclosure Alignments (LINED!)

ENCLOSURE VOLUME	(Number of Vents) & I.D. / Inside Diameter LENGTH of VENTS							TUNING FREQUENCY
(cubic feet)	(2) 2 inch	(1) 3 inch	(2) 3 inch	(1) 4 inch	(2) 4 inch	(1) 6 inch	(2) 6 inch	(Fb)
1.0 ft.^{3}								
	13.8"	15.0"	X	27.9"	X	X	X	30 Hz
	11.0"	12.0"	26.2"	22.5"	X	X	X	33 Hz
	9.6"	10.4"	23.0"	19.6"	X	X	X	35 Hz
	8.4"	9.0"	20.3"	17.2"	X	X	X	37 Hz
	6.9"	7.4"	16.9"	14.2"	X	X	X	40 Hz
	5.7"	6.0"	14.2"	11.9"	26.6"	29.2"	X	43 Hz
	5.1"	5.3"	12.7"	10.5"	24.0"	26.2"	X	45 Hz
	4.5"	4.6"	11.4"	9.4"	21.6"	23.6"	X	47 Hz
	3.7"	3.8"	9.8"	7.9"	18.7"	20.3"	X	50 Hz
	3.1"	3.1"	8.4"	6.6"	16.2"	17.5"	X	53 Hz
	2.8"	2.7"	7.6"	5.9"	14.8"	15.9"	X	55 Hz
	2.4"	2.3"	6.8"	5.3"	13.5"	14.4"	X	57 Hz
	2.0"	1.9"	5.9"	4.4"	11.8"	12.5"	29.2"	60 Hz
	1.7"	1.4"	5.1"	3.7"	10.3"	10.9"	26.0"	63 Hz
	1.4"	1.2"	4.6"	3.3"	9.5"	9.9"	24.0"	65 Hz
	1.2"	1.0"	4.1"	2.9"	8.7"	9.0"	22.3"	67 Hz
	1.0"	X	3.6"	2.4"	7.6"	7.9"	19.9"	70 Hz
	0.75"	X	3.0"	1.9"	6.7"	6.8"	17.8"	73 Hz
	X	X	2.7"	1.6"	6.1"	6.2"	16.6"	75 Hz
	X	X	2.4"	1.4"	5.6"	5.6"	15.4"	77 Hz
	X	X	2.0"	1.0"	4.9"	4.8"	13.8"	80 Hz
1.25 ft.^{3}								
	10.6"	11.5"	25.3"	21.7"	X	X	X	30 Hz
	8.4"	9.1"	20.4"	17.3"	X	X	X	33 Hz
	7.3"	7.8"	17.8"	15.0"	X	X	X	35 Hz
	6.3"	6.7"	15.6"	13.1"	29.1"	X	X	37 Hz
	5.1"	5.4"	12.9"	10.7"	24.3"	26.6"	X	40 Hz
	4.2"	4.3"	10.8"	8.8"	20.5"	22.3"	X	43 Hz
	3.7"	3.7"	9.6"	7.7"	18.4"	20.0"	X	45 Hz
	3.2"	3.2"	8.6"	6.8"	16.5"	17.9"	X	47 Hz
	2.6"	2.5"	7.2"	5.6"	14.2"	15.2"	X	50 Hz
	2.1"	2.0"	6.1"	4.6"	12.2"	13.0"	X	53 Hz
	1.8"	1.6"	5.5"	4.1"	11.0"	11.7"	27.6"	55 Hz
	1.6"	1.4"	4.9"	3.5"	10.0"	10.5"	25.2"	57 Hz
	1.2"	1.0"	4.1"	2.9"	8.6"	9.0"	22.2"	60 Hz
	0.9"	X	3.5"	2.3"	7.5"	7.7"	19.6"	63 Hz
	0.75"	X	3.1"	1.9"	6.8"	6.9"	18.0"	65 Hz
	X	X	2.7"	1.6"	6.2"	6.2"	16.6"	67 Hz
	X	X	2.3"	1.2"	5.3"	5.3"	14.7"	70 Hz
	X	X	1.8"	0.8"	4.6"	4.4"	13.1"	73 Hz
	X	X	1.6"	X	4.1"	3.9"	12.0"	75 Hz
	X	X	1.4"	X	3.7"	3.5"	11.1"	77 Hz
	X	X	1.0"	X	3.2"	2.8"	9.9"	80 Hz

SOUNDSTREAM TECHNOLOGIES

Universal Tuning Chart

June, 1994

Vented Enclosure Alignments (LINED!)

ENCLOSURE VOLUME	(Number of Vents) & I.D. / Inside Diameter LENGTH of VENTS							TUNING FREQUENCY
(cubic feet)	(2) 2 inch	(1) 3 inch	(2) 3 inch	(1) 4 inch	(2) 4 inch	(1) 6 inch	(2) 6 inch	(Fb)
1.5 ft.^{3}								
	8.5"	9.2"	20.6"	17.5"	X	X	X	30 Hz
	6.7"	7.2"	16.5"	13.9"	X	X	X	33 Hz
	5.8"	6.1"	14.3"	11.9"	26.8"	29.4"	X	35 Hz
	5.0"	5.2"	12.5"	10.3"	23.6"	25.8"	X	37 Hz
	4.0"	4.1"	10.3"	8.3"	19.6"	21.3"	X	40 Hz
	3.2"	3.2"	8.5"	6.8"	16.4"	17.8"	X	43 Hz
	2.7"	2.7"	7.5"	5.9"	14.7"	15.8"	X	45 Hz
	2.3"	2.2"	6.7"	5.1"	13.1"	14.0"	X	47 Hz
	1.9"	1.7"	5.5"	4.1"	11.1"	11.8"	27.8"	50 Hz
	1.4"	1.2"	4.6"	3.3"	9.5"	10.0"	24.1"	53 Hz
	1.2"	1.0"	4.1"	2.8"	8.5"	8.9"	22.0"	55 Hz
	1.0"	0.75"	3.6"	2.4"	7.7"	7.9"	20.0"	57 Hz
	0.75"	X	3.0"	1.8"	6.5"	6.7"	17.5"	60 Hz
	X	X	2.4"	1.3"	5.6"	5.6"	15.3"	63 Hz
	X	X	2.1"	1.1"	5.0"	4.9"	14.0"	65 Hz
	X	X	1.8"	0.75"	4.5"	4.3"	12.8"	67 Hz
	X	X	1.4"	X	3.8"	3.5"	11.3"	70 Hz
	X	X	1.0"	X	3.2"	2.8"	9.9"	73 Hz
	X	X	0.8"	X	2.8"	2.4"	9.0"	75 Hz
	X	X	X	X	2.4"	2.0"	8.3"	77 Hz
	X	X	X	X	2.0"	1.5"	7.2"	80 Hz
1.75 ft.^{3}								
	7.0"	7.5"	17.2"	14.5"	X	X	X	30 Hz
	5.5"	5.8"	13.7"	11.4"	25.7"	28.2"	X	33 Hz
	4.7"	4.8"	11.9"	9.8"	22.4"	24.5"	X	35 Hz
	4.0"	4.0"	10.3"	8.4"	19.6"	21.4"	X	37 Hz
	3.1"	3.1"	8.4"	6.7"	16.3"	17.6"	X	40 Hz
	2.5"	2.4"	6.9"	5.3"	13.5"	14.5"	X	43 Hz
	2.1"	1.9"	6.0"	4.6"	12.0"	12.8"	29.8"	45 Hz
	1.7"	1.6"	5.3"	3.9"	10.7"	11.3"	26.8"	47 Hz
	1.3"	1.1"	4.3"	3.0"	9.0"	9.4"	23.0"	50 Hz
	1.0"	X	3.5"	2.3"	7.6"	7.8"	19.8"	53 Hz
	0.75"	X	3.1"	1.9"	6.8"	6.9"	18.0"	55 Hz
	X	X	2.7"	1.6"	6.0"	6.1"	16.3"	57 Hz
	X	X	2.1"	1.1"	5.1"	5.0"	14.1"	60 Hz
	X	X	1.6"	X	4.2"	4.0"	12.3"	63 Hz
	X	X	1.4"	X	3.7"	3.5"	11.2"	65 Hz
	X	X	1.1"	X	3.3"	3.0"	10.2"	67 Hz
	X	X	0.75"	X	2.7"	2.3"	8.8"	70 Hz
	X	X	X	X	2.2"	1.7"	7.6"	73 Hz
	X	X	X	X	1.8"	1.3"	6.9"	75 Hz
	X	X	X	X	1.5"	1.0"	6.2"	77 Hz
	X	X	X	X	1.1"	X	5.3"	80 Hz

SOUNDSTREAM TECHNOLOGIES

Universal Tuning Chart

June, 1994

Vented Enclosure Alignments (LINED!)

ENCLOSURE VOLUME	(Number of Vents) & I.D. / Inside Diameter LENGTH of VENTS							TUNING FREQUENCY
(cubic feet)	(2) 3 inch	(3) 3 inch	(1) 4 inch	(2) 4 inch	(3) 4 inch	(1) 6 inch	(2) 6 inch	(Fb)
2.0 ft.^{3}								
	14.7"	23.1"	12.3"	27.4"	X	X	X	30 Hz
	11.6"	18.6"	9.6"	22.0"	X	24.0"	X	33 Hz
	10.0"	16.1"	8.1"	19.1"	X	20.8"	X	35 Hz
	8.7"	14.1"	6.9"	16.7"	26.5"	18.1"	X	37 Hz
	7.0"	11.6"	5.4"	13.7"	22.0"	14.7"	X	40 Hz
	5.6"	9.6"	4.2"	11.4"	18.5"	12.1"	28.3"	43 Hz
	4.9"	8.5"	3.6"	10.0"	16.5"	10.6"	25.3"	45 Hz
	4.3"	7.5"	3.0"	8.9"	14.8"	9.3"	22.7"	47 Hz
	3.4"	6.2"	2.2"	7.4"	12.5"	7.6"	19.4"	50 Hz
	2.7"	5.2"	1.6"	6.1"	10.7"	6.2"	16.6"	53 Hz
	2.3"	4.6"	1.3"	5.4"	9.6"	5.4"	15.0"	55 Hz
	2.0"	4.0"	0.9"	4.8"	8.6"	4.7"	13.5"	57 Hz
	1.5"	3.3"	X	3.9"	7.4"	3.7"	11.6"	60 Hz
	1.1"	2.7"	X	3.2"	6.3"	2.9"	10.0"	63 Hz
	0.75"	2.3"	X	2.8"	5.6"	2.4"	9.0"	65 Hz
	X	2.0"	X	2.4"	5.0"	2.0"	8.1"	67 Hz
	X	1.6"	X	1.9"	4.2"	1.4"	7.0"	70 Hz
	X	1.2"	X	1.4"	3.5"	0.9"	5.9"	73 Hz
	X	0.9"	X	1.1"	3.1"	X	5.3"	75 Hz
	X	0.75"	X	0.9"	2.7"	X	4.7"	77 Hz
	X	X	X	X	2.2"	X	3.9"	80 Hz
2.25 ft.^{3}								
	12.7"	20.2"	10.5"	24.0"	X	26.2"	X	30 Hz
	10.0"	16.1"	8.1"	19.6"	X	20.8"	X	33 Hz
	8.6"	14.0"	6.8"	16.6"	26.3"	17.9"	X	35 Hz
	7.4"	12.2"	5.8"	14.4"	23.1"	15.5"	X	37 Hz
	5.9"	9.9"	4.4"	11.8"	19.1"	12.5"	29.2"	40 Hz
	4.7"	8.1"	3.4"	9.7"	15.9"	10.2"	24.5"	43 Hz
	4.0"	7.1"	2.8"	8.5"	14.2"	8.8"	21.9"	45 Hz
	3.5"	6.3"	2.3"	7.5"	12.6"	7.7"	19.5"	47 Hz
	2.7"	5.2"	1.6"	6.1"	10.6"	6.2"	16.6"	50 Hz
	2.1"	4.2"	1.1"	5.0"	9.0"	4.9"	14.1"	53 Hz
	1.7"	3.7"	0.75"	4.4"	8.0"	4.2"	12.6"	55 Hz
	1.4"	3.2"	X	3.8"	7.2"	3.6"	11.4"	57 Hz
	1.0"	2.6"	X	3.1"	6.0"	2.7"	9.7"	60 Hz
	X	2.0"	X	2.4"	5.1"	2.0"	8.2"	63 Hz
	X	1.7"	X	2.0"	4.5"	1.6"	7.4"	65 Hz
	X	1.4"	X	1.7"	4.0"	1.2"	6.6"	67 Hz
	X	1.0"	X	1.2"	3.3"	X	5.5"	70 Hz
	X	X	X	0.75"	2.7"	X	4.6"	73 Hz
	X	X	X	X	2.3"	X	4.0"	75 Hz
	X	X	X	X	1.9"	X	3.5"	77 Hz
	X	X	X	X	1.5"	X	2.8"	80 Hz

SOUNDSTREAM TECHNOLOGIES

Universal Tuning Chart

June, 1994

Vented Enclosure Alignments (LINED!)

ENCLOSURE VOLUME	(Number of Vents) & I.D. / Inside Diameter LENGTH of VENTS							TUNING FREQUENCY
(cubic feet)	(2) 3 inch	(3) 3 inch	(1) 4 inch	(2) 4 inch	(3) 4 inch	(1) 6 inch	(2) 6 inch	(Fb)
2.5 ft.³								
	11.2"	17.9"	9.1"	21.2"	X	23.1"	X	30 Hz
	8.7"	14.2"	7.0"	16.8"	26.7"	18.2"	X	33 Hz
	7.4"	12.2"	5.8"	14.5"	23.2"	15.6"	X	35 Hz
	6.3"	10.6"	4.8"	12.6"	20.3"	13.4"	X	37 Hz
	5.0"	8.6"	3.6"	10.2"	16.8"	10.8"	25.7"	40 Hz
	3.9"	7.0"	2.7"	8.3"	13.9"	8.6"	21.5"	43 Hz
	3.3"	6.1"	2.2"	7.2"	12.3"	7.4"	19.1"	45 Hz
	2.8"	5.3"	1.7"	6.3"	10.9"	6.4"	17.0"	47 Hz
	2.2"	4.3"	1.1"	5.1"	9.1"	5.1"	14.3"	50 Hz
	1.6"	3.5"	X	4.1"	7.7"	3.9"	12.1"	53 Hz
	1.3"	3.0"	X	3.6"	6.8"	3.3"	10.8"	55 Hz
	1.0"	2.6"	X	3.0"	6.0"	2.7"	9.6"	57 Hz
	X	1.5"	X	2.4"	5.0"	2.0"	8.1"	60 Hz
	X	1.2"	X	1.8"	4.1"	1.3"	6.8"	63 Hz
	X	0.9"	X	1.4"	3.6"	0.9"	6.0"	65 Hz
	X	X	X	1.1"	3.1"	X	5.3"	67 Hz
	X	X	X	0.75"	2.5"	X	4.4"	70 Hz
	X	X	X	X	2.0"	X	3.5"	73 Hz
	X	X	X	X	1.6"	X	3.0"	75 Hz
	X	X	X	X	1.3"	X	2.6"	77 Hz
	X	X	X	X	0.9"	X	1.9"	80 Hz
2.75 ft.³								
	9.9"	15.9"	8.0"	18.9"	29.9"	20.5"	X	30 Hz
	7.7"	12.6"	6.0"	14.9"	23.9"	16.1"	X	33 Hz
	6.5"	10.8"	5.0"	12.8"	20.7"	13.7"	X	35 Hz
	5.5"	9.3"	4.1"	11.1"	18.1"	11.8"	27.7"	37 Hz
	4.3"	7.5"	3.0"	8.9"	14.8"	9.3"	22.8"	40 Hz
	3.3"	6.1"	2.2"	7.2"	12.2"	7.4"	19.0"	43 Hz
	2.8"	5.2"	1.7"	6.2"	10.8"	6.3"	16.8"	45 Hz
	2.3"	4.5"	1.2"	5.4"	9.5"	5.3"	14.9"	47 Hz
	1.7"	3.6"	0.75"	4.3"	7.9"	4.1"	12.5"	50 Hz
	1.2"	2.9"	X	3.4"	6.6"	3.1"	10.4"	53 Hz
	0.9"	2.4"	X	2.9"	5.8"	2.5"	9.3"	55 Hz
	X	2.0"	X	2.4"	5.1"	2.0"	8.2"	57 Hz
	X	1.5"	X	1.8"	4.1"	1.3"	6.8"	60 Hz
	X	1.1"	X	1.3"	3.4"	0.75"	5.6"	63 Hz
	X	0.8"	X	1.0"	2.9"	X	4.9"	65 Hz
	X	X	X	X	2.5"	X	4.3"	67 Hz
	X	X	X	X	1.9"	X	3.4"	70 Hz
	X	X	X	X	1.4"	X	2.7"	73 Hz
	X	X	X	X	1.1"	X	2.2"	75 Hz
	X	X	X	X	0.8"	X	1.8"	77 Hz
	X	X	X	X	X	X	1.2"	80 Hz

SOUNDSTREAM TECHNOLOGIES

Universal Tuning Chart

June, 1994

Vented Enclosure Alignments (LINED!)

ENCLOSURE VOLUME	(Number of Vents) & I.D. / Inside Diameter LENGTH of VENTS							TUNING FREQUENCY
(cubic feet)	(2) 3 inch	(3) 3 inch	(1) 4 inch	(2) 4 inch	(3) 4 inch	(1) 6 inch	(2) 6 inch	(Fb)
3.0 ft.³								
	8.8"	14.3"	7.0"	17.0"	26.9"	18.4"	X	30 Hz
	6.8"	11.3"	5.2"	13.4"	21.5"	14.3"	X	33 Hz
	5.7"	9.7"	4.3"	11.5"	18.6"	12.2"	28.5"	35 Hz
	4.8"	8.3"	3.5"	9.8"	16.2"	10.3"	24.9"	37 Hz
	3.7"	6.6"	2.5"	7.9"	13.2"	8.1"	20.4"	40 Hz
	2.8"	5.3"	1.3"	6.3"	10.9"	6.3"	16.9"	43 Hz
	2.3"	4.5"	0.9"	5.4"	9.5"	5.3"	14.9"	45 Hz
	1.9"	3.9"	X	4.6"	8.4"	4.5"	13.2"	47 Hz
	1.3"	3.0"	X	3.6"	6.9"	3.4"	10.9"	50 Hz
	0.8"	2.3"	X	2.8"	5.6"	2.4"	9.1"	53 Hz
	X	1.9"	X	2.3"	4.9"	1.9"	8.0"	55 Hz
	X	1.6"	X	1.9"	4.3"	1.4"	7.0"	57 Hz
	X	1.1"	X	1.3"	3.4"	0.75"	5.8"	60 Hz
	X	0.75"	X	0.8"	2.7"	X	4.7"	63 Hz
	X	X	X	X	2.3"	X	4.0"	65 Hz
	X	X	X	X	1.9"	X	3.4"	67 Hz
	X	X	X	X	1.4"	X	2.6"	70 Hz
	X	X	X	X	0.9"	X	1.9"	73 Hz
	X	X	X	X	X	X	1.5"	75 Hz
	X	X	X	X	X	X	1.1"	77 Hz
	X	X	X	X	X	X	0.75"	80 Hz
3.25 ft.³								
	7.9"	13.0"	6.2"	15.4"	24.5"	16.6"	X	30 Hz
	6.0"	10.1"	4.6"	12.0"	19.5"	12.8"	29.9"	33 Hz
	5.0"	8.7"	3.7"	10.3"	16.9"	10.8"	25.9"	35 Hz
	4.2"	7.4"	2.9"	8.8"	14.6"	9.2"	22.5"	37 Hz
	3.2"	5.9"	2.0"	7.0"	11.9"	7.0"	18.4"	40 Hz
	2.4'	4.6"	1.3"	5.5"	9.7"	5.5"	15.1"	43 Hz
	1.9"	3.9"	0.9"	4.7"	8.5"	4.5"	13.3"	45 Hz
	1.5"	3.3"	X	4.0"	7.4"	3.7"	11.7"	47 Hz
	1.0"	2.6"	X	3.0"	6.0"	2.7"	9.6"	50 Hz
	X	1.9"	X	2.3"	4.9"	1.9"	7.9"	53 Hz
	X	1.5"	X	1.8"	4.2"	1.4"	6.9"	55 Hz
	X	1.2"	X	1.4"	3.6"	0.9"	6.0"	57 Hz
	X	0.75"	X	0.9"	2.8"	X	4.8"	60 Hz
	X	X	X	X	2.2"	X	3.8"	63 Hz
	X	X	X	X	1.8"	X	3.2"	65 Hz
	X	X	X	X	1.4"	X	2.7"	67 Hz
	X	X	X	X	0.9"	X	2.0"	70 Hz
	X	X	X	X	X	X	1.3"	73 Hz
	X	X	X	X	X	X	1.0"	75 Hz
	X	X	X	X	X	X	X	77 Hz
	X	X	X	X	X	X	X	80 Hz

SOUNDSTREAM TECHNOLOGIES

Universal Tuning Chart

June, 1994

Vented Enclosure Alignments (LINED!)

ENCLOSURE VOLUME	(Number of Vents) & I.D. / Inside Diameter LENGTH of VENTS							TUNING FREQUENCY
(cubic feet)	(2) 3 inch	(1) 4 inch	(2) 4 inch	(3) 4 inch	(4) 4 inch	(1) 6 inch	(2) 6 inch	(Fb)
3.50 ft.³								
	11.6"	9.5"	21.9"	X	X	23.9"	X	25 Hz
	9.5"	7.7"	18.2"	X	X	19.8"	X	27 Hz
	7.2"	5.6"	14.0"	22.5"	X	15.0"	X	30 Hz
	5.4"	4.0"	10.9"	17.8"	24.7"	11.5"	27.3"	33 Hz
	4.5"	3.2"	9.3"	15.3"	21.4"	9.7"	23.6"	35 Hz
3.75 ft.³								
	10.6"	8.6"	20.2"	X	X	22.0"	X	25 Hz
	8.7"	6.9"	16.7"	26.6"	X	18.1"	X	27 Hz
	6.5"	5.0"	12.8"	20.7"	28.5"	13.7"	X	30 Hz
	4.8"	3.5"	9.9"	16.3"	22.7"	10.4"	25.1"	33 Hz
	4.0"	2.7"	8.4"	14.0"	19.7"	8.7"	21.6"	35 Hz
4.00 ft.³								
	9.8"	7.9"	18.7"	X	X	20.3"	X	25 Hz
	8.0"	6.3"	15.4"	24.6"	X	16.6"	X	27 Hz
	5.9"	4.4"	11.8"	19.1"	26.4"	12.5"	29.2"	30 Hz
	4.4"	3.1"	9.1"	15.0"	21.0"	9.5"	23.1"	33 Hz
	3.6"	2.4"	7.6"	12.9"	18.1"	7.8"	19.9"	35 Hz
4.25 ft.³								
	9.0"	7.2"	17.3"	27.5"	X	18.8"	X	25 Hz
	7.3"	5.7"	14.3"	22.9"	X	15.4"	X	27 Hz
	5.4"	4.0"	10.8"	17.7"	24.6"	11.5"	27.2"	30 Hz
	3.9"	2.7"	8.3"	13.9"	19.5"	8.6"	21.4"	33 Hz
	3.2"	2.0"	6.9"	11.9"	16.8"	7.1"	18.4"	35 Hz
4.50 ft.³								
	8.4"	6.6"	16.1"	25.7"	X	17.5"	X	25 Hz
	6.7"	5.2"	13.3"	21.4"	29.5"	14.2"	X	27 Hz
	4.9"	3.6"	10.0"	16.5"	23.0"	10.6"	25.3"	30 Hz
	3.5"	2.4"	7.6"	12.9"	18.1"	7.9"	19.9"	33 Hz
	2.8"	1.7"	6.3"	11.0"	15.6"	6.4"	17.0"	35 Hz
4.75 ft.³								
	7.8"	6.1"	15.1"	24.1"	X	16.3"	X	25 Hz
	6.2"	4.7"	12.4"	20.0"	27.7"	13.2"	X	27 Hz
	4.5"	3.2"	9.3"	15.4"	21.5"	9.7"	23.7"	30 Hz
	3.2"	2.1"	7.0"	12.0"	16.9"	7.2"	18.5"	33 Hz
	2.5"	1.5"	5.8"	10.1"	14.5"	5.8"	15.8"	35 Hz

SOUNDSTREAM TECHNOLOGIES

Universal Tuning Chart

June, 1994

Vented Enclosure Alignments (LINED!)

ENCLOSURE VOLUME	(Number of Vents) & I.D. / Inside Diameter LENGTH of VENTS							TUNING FREQUENCY
(cubic feet)	(2) 3 inch	(3) 3 inch	(2) 4 inch	(3) 4 inch	(4) 4 inch	(1) 6 inch	(2) 6 inch	(Fb)
5.00 ft.³								
	7.2"	11.9"	14.1"	22.7"	31.2"	15.2"	X	25 Hz
	5.8"	9.8"	11.6"	18.8"	26.1"	12.3"	28.8"	27 Hz
	4.1"	7.3"	8.6"	14.4"	20.2"	9.0"	22.2"	30 Hz
	2.9"	5.4"	6.5"	11.1"	15.8"	6.6"	17.3"	33 Hz
	2.3"	4.5"	5.3"	9.4"	13.5"	5.3"	14.7"	35 Hz
5.50 ft.³								
	6.3"	10.5"	12.5"	20.2"	27.9"	13.4"	X	25 Hz
	5.0"	8.6"	10.2"	16.7"	23.2"	10.7"	25.6"	27 Hz
	3.5"	6.3"	7.5"	12.8"	17.9"	7.7"	19.6"	30 Hz
	2.4"	4.6"	5.5"	9.7"	13.9"	5.5"	15.2"	33 Hz
	1.8"	3.8"	4.5"	8.2"	11.8"	4.3"	12.8"	35 Hz
6.00 ft.³								
	5.5"	9.4"	11.1"	18.2"	25.2"	11.8"	27.8"	25 Hz
	4.3"	7.6"	9.0"	15.0"	20.9"	9.4"	23.0"	27 Hz
	3.0"	5.5"	6.5"	11.3"	16.0"	6.7"	17.5"	30 Hz
	1.9"	4.0"	4.7"	8.6"	12.4"	4.6"	13.4"	33 Hz
	1.4"	3.2"	3.8"	7.1"	10.5"	3.5"	11.3"	35 Hz
6.50 ft.³								
	4.9"	8.4"	10.0"	16.4"	22.9"	10.5"	25.2"	25 Hz
	3.8"	6.7"	8.0"	13.5"	18.9"	8.3"	20.8"	27 Hz
	2.5"	4.8"	5.7"	10.1"	14.4"	5.7"	15.7"	30 Hz
	1.6"	3.4"	4.1"	7.6"	11.0"	3.9"	11.9"	33 Hz
	1.1"	2.7"	3.2"	6.2"	9.3"	2.9"	10.0"	35 Hz
7.00 ft.³								
	4.3"	7.6"	9.0"	14.9"	20.9"	9.4"	23.0"	25 Hz
	3.3"	6.0"	7.2"	12.2"	17.2"	7.3"	18.9"	27 Hz
	2.1"	4.2"	5.0"	9.0"	13.0"	5.0"	14.1"	30 Hz
	1.2"	2.9"	3.5"	6.7"	9.9"	3.2"	10.6"	33 Hz
	0.75"	2.3"	2.7"	5.5"	8.3"	2.3"	8.8"	35 Hz
7.50 ft.³								
	3.8"	6.8"	8.1"	13.6"	19.2"	8.4"	21.1"	25 Hz
	2.9"	5.4"	6.4"	11.1"	15.7"	6.5"	17.2"	27 Hz
	1.8"	3.8"	4.5"	8.1"	11.8"	4.3"	12.8"	30 Hz
	1.0"	2.5"	3.0"	6.0"	8.9"	2.7"	9.5"	33 Hz
	X	1.9"	2.2"	4.8"	7.4"	1.8"	7.8"	35 Hz

SOUNDSTREAM TECHNOLOGIES

Universal Tuning Chart

June, 1994

Vented Enclosure Alignments (LINED!)

ENCLOSURE VOLUME	(Number of Vents) & I.D. / Inside Diameter LENGTH of VENTS							TUNING FREQUENCY
(cubic feet)	(2) 3 inch	(3) 3 inch	(2) 4 inch	(3) 4 inch	(4) 4 inch	(1) 6 inch	(2) 6 inch	(Fb)
8.00 ft.³								
	7.0"	11.6"	13.7"	22.0"	X	14.7"	X	20 Hz
	4.6"	7.9"	9.4"	15.6"	21.8"	9.9"	24.0"	23 Hz
	3.4"	6.2"	7.4"	12.5"	17.7"	7.6"	19.4"	25 Hz
	2.5"	4.9"	5.8"	10.1"	14.4"	5.8"	15.8"	27 Hz
	1.5"	3.3"	3.9"	7.4"	10.8"	3.7"	11.6"	30 Hz
8.50 ft.³								
	6.4"	10.7"	12.7"	20.5"	28.3"	13.6"	X	20 Hz
	4.1"	7.3"	8.6"	14.4"	20.2"	9.0"	22.2"	23 Hz
	3.0"	5.7"	6.7"	11.5"	16.3"	6.8"	17.9"	25 Hz
	2.2"	4.4"	5.2"	9.3"	13.3"	5.1"	14.5"	27 Hz
	1.2"	2.9"	3.5"	6.7"	9.8"	3.2"	10.6"	30 Hz
9.00 ft.³								
	5.9"	9.9"	11.8"	19.1"	26.4"	12.5"	29.2"	20 Hz
	3.7"	6.7"	8.0"	13.4"	18.8"	8.2"	20.6"	23 Hz
	2.7"	5.2"	6.1"	10.6"	15.2"	6.2"	16.6"	25 Hz
	1.9"	4.0"	4.7"	8.5"	12.3"	4.6"	13.3"	27 Hz
	1.0"	2.6"	3.1"	6.0"	9.0"	2.7"	9.7"	30 Hz
9.50 ft.³								
	5.4"	9.2"	11.0"	17.9"	24.8"	11.6"	27.4"	20 Hz
	3.4"	6.2"	7.3"	12.4"	17.5"	7.5"	19.3"	23 Hz
	2.4"	4.7"	5.6"	9.8"	14.1"	5.6"	15.3"	25 Hz
	1.6"	3.6"	4.2"	7.8"	11.4"	4.1"	12.3"	27 Hz
	.75"	2.3"	2.7"	5.5"	8.3"	2.3"	8.8"	30 Hz
10.0 ft.³								
	5.0"	8.6"	10.2"	16.8"	23.3"	10.8"	25.7"	20 Hz
	3.1"	5.7"	6.8"	11.6"	16.4"	6.9"	18.0"	23 Hz
	2.2"	4.3"	5.1"	9.1"	13.1"	5.0"	14.3"	25 Hz
	1.4"	3.2"	3.8"	7.2"	10.6"	3.6"	11.4"	27 Hz
	X	2.0"	2.4"	5.0"	7.6"	1.9"	8.1"	30 Hz
10.5 ft.³								
	4.6"	8.0"	9.5"	15.6"	22.0"	10.0"	24.2"	20 Hz
	2.8"	5.3"	6.3"	10.8"	15.4"	6.3"	16.8"	23 Hz
	1.9"	4.0"	4.7"	8.5"	12.3"	4.6"	13.3"	25 Hz
	1.2"	2.9"	3.5"	6.7"	9.8"	3.2"	10.6"	27 Hz
	X	1.7"	2.1"	4.6"	7.0"	1.6"	7.4"	30 Hz

SOUNDSTREAM TECHNOLOGIES

Universal Tuning Chart

June, 1994

Vented Enclosure Alignments (UNLINED!)

ENCLOSURE VOLUME	(Number of Vents) & I.D. / Inside Diameter LENGTH of VENTS							TUNING FREQUENCY
(cubic feet)	(2) 2 inch	(1) 3 inch	(2) 3 inch	(1) 4 inch	(2) 4 inch	(1) 6 inch	(2) 6 inch	(Fb)
0.5 ft.³								
	X	X	X	X	X	X	X	30 Hz
	X	X	X	X	X	X	X	33 Hz
	25.7"	28.5"	X	X	X	X	X	35 Hz
	22.8"	25.3"	X	X	X	X	X	37 Hz
	19.2"	21.2"	X	X	X	X	X	40 Hz
	16.4"	18.0"	X	X	X	X	X	43 Hz
	14.8"	16.3"	X	X	X	X	X	45 Hz
	13.4"	14.7"	X	27.2"	X	X	X	47 Hz
	11.6"	12.7"	27.5"	23.7"	X	X	X	50 Hz
	10.1"	11.0"	24.2"	20.7"	X	X	X	53 Hz
	9.3"	10.0"	22.2"	19.0"	X	X	X	55 Hz
	8.5"	9.2"	20.5"	17.4"	X	X	X	57 Hz
	7.5"	8.0"	18.2"	15.4"	X	X	X	60 Hz
	6.6"	7.0"	16.3"	13.7"	X	X	X	63 Hz
	6.1"	6.5"	15.1"	12.6"	28.1"	X	X	65 Hz
	5.6"	5.9"	14.0"	11.7"	26.3"	28.8"	X	67 Hz
	5.0"	5.2"	12.6"	10.4"	23.7"	26.0"	X	70 Hz
	4.5"	4.6"	11.4"	9.3"	21.5"	23.5"	X	73 Hz
	4.1"	4.2"	10.6"	8.6"	20.2"	22.0"	X	75 Hz
	3.8"	3.9"	9.9"	8.0"	18.9"	20.6"	X	77 Hz
	3.4"	3.4"	9.0"	7.2"	17.3"	18.7"	X	80 Hz
0.75 ft.³								
	23.2"	25.6"	X	X	X	X	X	30 Hz
	18.8"	20.8"	X	X	X	X	X	33 Hz
	16.5"	18.2"	X	X	X	X	X	35 Hz
	14.6"	16.0"	X	29.6"	X	X	X	37 Hz
	12.2"	13.3"	28.8"	24.8"	X	X	X	40 Hz
	10.3"	11.2"	24.5"	21.0"	X	X	X	43 Hz
	9.2"	10.0"	22.1"	18.9"	X	X	X	45 Hz
	8.3"	8.9"	20.1"	17.0"	X	X	X	47 Hz
	7.1"	7.6"	17.4"	14.7"	X	X	X	50 Hz
	6.1"	6.5"	15.1"	12.7"	28.2"	X	X	53 Hz
	5.6"	5.8"	13.9"	11.5"	25.9"	28.5"	X	55 Hz
	5.0"	5.3"	12.7"	10.5"	23.9"	26.1"	X	57 Hz
	4.4"	4.5"	11.2"	9.1"	21.2"	23.1"	X	60 Hz
	3.8"	3.8"	9.9"	8.0"	18.8"	20.5"	X	63 Hz
	3.4"	3.5"	9.1"	7.3"	17.5"	18.9"	X	65 Hz
	3.1"	3.1"	8.4"	6.7"	16.2"	17.5"	X	67 Hz
	2.7"	2.6"	7.4"	5.8"	14.5"	15.6"	X	70 Hz
	2.3"	2.2"	6.6"	5.1"	13.0"	14.0"	X	73 Hz
	2.1"	2.0"	6.1"	4.6"	12.1"	12.9"	X	75 Hz
	1.9"	1.7"	5.6"	4.2"	11.3"	12.0"	28.2"	77 Hz
	1.6"	1.4"	5.0"	3.7"	10.2"	10.8"	25.7"	80 Hz

SOUNDSTREAM TECHNOLOGIES

Universal Tuning Chart

June, 1994

Vented Enclosure Alignments (UNLINED!)

ENCLOSURE VOLUME	(Number of Vents) & I.D. / Inside Diameter LENGTH of VENTS							TUNING FREQUENCY
(cubic feet)	(2) 2 inch	(1) 3 inch	(2) 3 inch	(1) 4 inch	(2) 4 inch	(1) 6 inch	(2) 6 inch	(Fb)
1.0 ft.³								
	16.9"	18.6"	X	X	X	X	X	30 Hz
	13.6"	14.9"	X	27.7"	X	X	X	33 Hz
	11.9"	13.0"	28.1"	24.2"	X	X	X	35 Hz
	10.5"	11.4"	24.8"	21.3"	X	X	X	37 Hz
	8.7"	9.3"	20.8"	17.7"	X	X	X	40 Hz
	7.3"	7.7"	17.6"	14.9"	X	X	X	43 Hz
	6.5"	6.9"	15.8"	13.3"	29.5"	X	X	45 Hz
	5.8"	6.1"	14.2"	11.9"	26.7"	29.4"	X	47 Hz
	4.9"	5.1"	12.2"	10.1"	23.2"	25.4"	X	50 Hz
	4.1"	4.2"	10.6"	8.7"	20.2"	22.0"	X	53 Hz
	3.7"	3.7"	9.6"	7.8"	18.5"	20.1"	X	55 Hz
	3.3"	3.3"	8.7"	7.0"	16.9"	18.3"	X	57 Hz
	2.8"	2.7"	7.6"	6.0"	14.9"	16.1"	X	60 Hz
	2.4"	2.2"	6.6"	5.1"	13.2"	14.1"	X	63 Hz
	2.1"	2.0"	6.0"	4.6"	12.1"	12.9"	X	65 Hz
	1.9"	1.7"	5.5"	4.1"	11.2"	11.9"	27.9"	67 Hz
	1.5"	1.3"	4.8"	3.5"	9.9"	10.4"	25.1"	70 Hz
	1.3"	1.0"	4.1"	3.0"	8.8"	9.2"	22.6"	73 Hz
	1.1"	0.8"	3.8"	2.6"	8.1"	8.4"	21.1"	75 Hz
	1.0"	X	3.4"	2.3"	7.5"	7.7"	19.7"	77 Hz
	0.75"	X	3.0"	1.9"	6.7"	6.8"	17.8"	80 Hz
1.25 ft.³								
	13.1"	14.4"	X	26.7"	X	X	X	30 Hz
	10.5"	11.4"	25.0"	21.5"	X	X	X	33 Hz
	9.1"	9.9"	21.9"	18.7"	X	X	X	35 Hz
	8.0"	8.6"	19.3"	16.4"	X	X	X	37 Hz
	6.6"	7.0"	16.1"	13.5"	29.9"	X	X	40 Hz
	5.4"	5.7"	13.5"	11.2"	25.4"	27.8"	X	43 Hz
	4.8"	5.0"	12.1"	10.0"	22.8"	25.0"	X	45 Hz
	4.2"	4.3"	10.9"	8.9"	20.6"	22.5"	X	47 Hz
	3.5"	3.5"	9.3"	7.4"	17.8"	19.3"	X	50 Hz
	2.9"	2.9"	7.9"	6.2"	15.4"	16.6"	X	53 Hz
	2.6"	2.5"	7.1"	5.6"	14.0"	15.0"	X	55 Hz
	2.3"	2.1"	6.5"	4.9"	12.8"	13.6"	X	57 Hz
	1.9"	1.7"	5.5"	4.1"	11.1"	11.5"	27.8"	60 Hz
	1.5"	1.3"	4.8"	3.4"	9.7"	10.2"	24.7"	63 Hz
	1.3"	1.0"	4.3"	3.0"	8.9"	9.3"	22.8"	65 Hz
	1.1"	0.8"	3.9"	2.6"	8.2"	8.5"	21.1"	67 Hz
	0.9"	X	3.3"	2.1"	7.2"	7.3"	18.9"	70 Hz
	X	X	2.8"	1.7"	6.3"	6.3"	16.9"	73 Hz
	X	X	2.5"	1.4"	5.7"	5.7"	15.7"	75 Hz
	X	X	2.2"	1.2"	5.2"	5.2"	14.5"	77 Hz
	X	X	1.8"	0.8"	4.6"	4.4"	13.0"	80 Hz

SOUNDSTREAM TECHNOLOGIES

Universal Tuning Chart

June, 1994

Vented Enclosure Alignments (UNLINED!)

ENCLOSURE VOLUME	(Number of Vents) & I.D. / Inside Diameter LENGTH of VENTS							TUNING FREQUENCY
(cubic feet)	(2) 2 inch	(1) 3 inch	(2) 3 inch	(1) 4 inch	(2) 4 inch	(1) 6 inch	(2) 6 inch	(Fb)
1.5 ft.^{3}								
	10.6"	11.6"	25.3"	21.7"	X	X	X	30 Hz
	8.5"	9.1"	20.4"	17.3"	X	X	X	33 Hz
	7.3"	7.8"	17.8"	15.0"	X	X	X	35 Hz
	6.3"	6.7"	15.6"	13.1"	29.1"	X	X	37 Hz
	5.2"	5.4"	12.7"	10.7"	24.3"	26.6"	X	40 Hz
	4.2"	4.3"	10.8"	8.8"	20.5"	22.4"	X	43 Hz
	3.7"	3.7"	9.6"	7.7"	18.4"	20.0"	X	45 Hz
	3.2"	3.2"	8.6"	6.8"	16.5"	17.9"	X	47 Hz
	2.6"	2.5"	7.2"	5.6"	14.2"	15.2"	X	50 Hz
	2.1"	2.0"	6.1"	4.6"	12.2"	13.0"	X	53 Hz
	1.8"	1.6"	5.5"	4.1"	11.0"	11.7"	27.6"	55 Hz
	1.6"	1.4"	4.9"	3.5"	10.0"	10.5"	25.2"	57 Hz
	1.2"	1.0"	4.1"	2.9"	8.6"	9.0"	22.2"	60 Hz
	0.9"	X	3.5"	2.3"	7.5"	7.7"	19.6"	63 Hz
	0.75"	X	3.1"	1.9"	6.8"	6.9"	18.0"	65 Hz
	X	X	2.7"	1.6"	6.2"	6.2"	16.6"	67 Hz
	X	X	2.3"	1.2"	5.3"	5.3"	14.7"	70 Hz
	X	X	1.8"	0.8"	4.6"	4.4"	13.1"	73 Hz
	X	X	1.6"	X	4.1"	3.9"	12.0"	75 Hz
	X	X	1.4"	X	3.7"	3.5"	11.1"	77 Hz
	X	X	1.0"	X	3.2"	2.8"	9.9"	80 Hz
1.75 ft.^{3}								
	8.8"	9.5"	21.2"	18.1"	X	X	X	30 Hz
	7.0"	7.4"	17.1"	14.4"	X	X	X	33 Hz
	6.0"	6.3"	14.8"	12.4"	27.7"	X	X	35 Hz
	5.2"	5.4"	13.0"	10.7"	24.4"	26.7"	X	37 Hz
	4.1"	4.3"	10.7"	8.7"	20.3"	22.1"	X	40 Hz
	3.3"	3.3"	8.8"	7.1"	17.0"	18.4"	X	43 Hz
	2.9"	2.8"	7.8"	6.2"	15.2"	16.4"	X	45 Hz
	2.5"	2.4"	6.9"	5.4"	13.6"	14.6"	X	47 Hz
	2.0"	1.8"	5.8"	4.3"	11.6"	12.3"	28.8"	50 Hz
	1.5"	1.3"	4.8"	3.5"	9.9"	10.4"	25.0"	53 Hz
	1.3"	1.0"	4.3"	3.0"	8.9"	9.3"	22.8"	55 Hz
	1.1"	0.8"	3.8"	2.6"	8.0"	8.3"	20.8"	57 Hz
	0.8"	X	3.1"	1.5"	6.8"	7.0"	18.2"	60 Hz
	X	X	2.6"	1.2"	5.8"	5.9"	15.9"	63 Hz
	X	X	2.2"	0.9"	5.3"	5.2"	14.6"	65 Hz
	X	X	1.9"	X	4.7"	4.6"	13.4"	67 Hz
	X	X	1.5"	X	4.0"	3.8"	11.8"	70 Hz
	X	X	1.2"	X	3.4"	3.1"	10.3"	73 Hz
	X	X	0.9"	X	3.0"	2.6"	9.5"	75 Hz
	X	X	0.75"	X	2.6"	2.2"	8.7"	77 Hz
	X	X	X	X	2.1"	1.7"	7.6"	80 Hz

SOUNDSTREAM TECHNOLOGIES

Universal Tuning Chart

June, 1994

Vented Enclosure Alignments (UNLINED!)

ENCLOSURE VOLUME	(Number of Vents) & I.D. / Inside Diameter LENGTH of VENTS							TUNING FREQUENCY
(cubic feet)	(2) 3 inch	(3) 3 inch	(1) 4 inch	(2) 4 inch	(3) 4 inch	(1) 6 inch	(2) 6 inch	(Fb)
2.0 ft.³								
	18.2"	28.4"	15.4"	X	X	X	X	30 Hz
	14.6"	22.9"	12.1"	27.2"	X	29.9"	X	33 Hz
	12.6"	20.0"	10.4"	23.7"	X	26.0"	X	35 Hz
	11.0"	17.6"	9.0"	20.8"	X	22.7"	X	37 Hz
	9.0"	14.5"	7.2"	17.2"	27.3"	18.7"	X	40 Hz
	7.4"	12.1"	5.8"	14.4"	23.1"	15.5"	X	43 Hz
	6.5"	10.8"	5.0"	12.8"	20.7"	13.7"	X	45 Hz
	5.7"	9.6"	4.3"	11.4"	18.6"	12.1"	28.5"	47 Hz
	4.7"	8.1"	3.4"	9.6"	15.9"	10.1"	24.5"	50 Hz
	3.9"	6.9"	2.6"	8.2"	13.7"	8.5"	21.1"	53 Hz
	3.4"	6.1"	2.2"	7.3"	12.4"	7.5"	19.2"	55 Hz
	2.9"	5.5"	1.8"	6.5"	11.2"	6.6"	17.4"	57 Hz
	2.4"	4.6"	1.3"	5.5"	9.7"	5.5"	15.2"	60 Hz
	1.9"	3.9"	0.9"	4.6"	8.4"	4.5"	13.2"	63 Hz
	1.6"	3.5"	X	4.1"	7.6"	3.9"	12.0"	65 Hz
	1.3"	3.1"	X	3.6"	6.9"	3.4"	11.0"	67 Hz
	1.0"	2.5"	X	3.0"	6.0"	2.7"	9.5"	70 Hz
	X	2.1"	X	2.5"	5.1"	2.0"	8.3"	73 Hz
	X	1.8"	X	2.1"	4.6"	1.7"	7.5"	75 Hz
	X	1.5"	X	1.8"	4.2"	1.3"	6.8"	77 Hz
	X	1.2"	X	1.4"	3.5"	0.9"	5.9"	80 Hz
2.25 ft.³								
	15.9"	24.9"	13.3"	29.5"	X	X	X	30 Hz
	12.6"	20.0"	10.4"	23.7"	X	26.0"	X	33 Hz
	10.9"	17.4"	8.9"	20.7"	X	22.5"	X	35 Hz
	9.4"	15.2"	7.6"	18.1"	28.6"	19.6"	X	37 Hz
	7.7"	12.6"	6.0"	14.9"	23.8"	16.1"	X	40 Hz
	6.2"	10.4"	4.7"	12.4"	20.0"	13.2"	X	43 Hz
	5.4"	9.2"	4.0"	11.0"	17.9"	11.6"	27.4"	45 Hz
	4.7"	8.2"	3.4"	9.7"	16.0"	10.2"	24.6"	47 Hz
	3.8"	6.9"	2.6"	8.1"	13.7"	8.4"	21.1"	50 Hz
	3.1"	5.7"	2.0"	6.8"	11.7"	6.9"	18.1"	53 Hz
	2.7"	5.1"	1.6"	6.0"	10.5"	6.1"	16.4"	55 Hz
	2.3"	4.5"	1.2"	5.4"	9.5"	5.3"	14.8"	57 Hz
	1.8"	3.8"	0.8"	4.5"	8.1"	4.3"	12.8"	60 Hz
	1.3"	3.1"	X	3.7"	7.0"	3.4"	11.1"	63 Hz
	1.1"	2.7"	X	3.2"	6.3"	2.9"	10.0"	65 Hz
	0.8"	2.4"	X	2.8"	5.7"	2.4"	9.1"	67 Hz
	X	1.9"	X	2.2"	4.8"	1.8"	7.8"	70 Hz
	X	1.5"	X	1.7"	4.1"	1.3"	6.7"	73 Hz
	X	1.2"	X	1.5"	3.6"	0.9"	6.0"	75 Hz
	X	1.0"	X	1.2"	3.2"	X	5.4"	77 Hz
	X	X	X	0.8"	2.7"	X	4.6"	80 Hz

SOUNDSTREAM TECHNOLOGIES

Universal Tuning Chart

June, 1994

Vented Enclosure Alignments (UNLINED!)

ENCLOSURE VOLUME	(Number of Vents) & I.D. / Inside Diameter LENGTH of VENTS							TUNING FREQUENCY
(cubic feet)	(2) 3 inch	(3) 3 inch	(1) 4 inch	(2) 4 inch	(3) 4 inch	(1) 6 inch	(2) 6 inch	(Fb)
2.5 ft.³								
	14.0"	22.1"	11.6"	26.2"	X	28.7"	X	30 Hz
	11.1"	17.7"	9.0"	21.0"	X	22.9"	X	33 Hz
	9.5"	15.3"	7.7"	18.2"	28.6"	19.8"	X	35 Hz
	8.2"	13.4"	6.5"	15.9"	25.3"	17.1"	X	37 Hz
	6.6"	11.0"	5.1"	13.0"	21.0"	13.9"	X	40 Hz
	5.3"	9.1"	3.9"	10.7"	17.6"	11.4"	26.9"	43 Hz
	4.6"	8.0"	3.3"	9.5"	15.7"	9.9"	24.1"	45 Hz
	4.0"	7.0"	2.7"	8.4"	14.0"	8.7"	21.6"	47 Hz
	3.2"	5.8"	2.0"	6.9"	11.8"	7.1"	18.4"	50 Hz
	2.5"	4.8"	1.4"	5.7"	10.1"	5.7"	15.7"	53 Hz
	2.1"	4.3"	1.1"	5.1"	9.0"	5.0"	14.1"	55 Hz
	1.8"	3.7"	0.75"	4.4"	8.1"	4.3"	12.7"	57 Hz
	1.3"	3.0"	X	3.6"	6.9"	3.4"	10.9"	60 Hz
	0.9"	2.5"	X	2.9"	5.8"	2.6"	9.3"	63 Hz
	X	2.1"	X	2.5"	5.2"	2.1"	8.4"	65 Hz
	X	1.8"	X	2.1"	4.7"	1.7"	7.6"	67 Hz
	X	1.4"	X	1.6"	3.9"	1.1"	6.4"	70 Hz
	X	1.0"	X	1.2"	3.2"	X	5.4"	73 Hz
	X	0.75"	X	0.9"	2.8"	X	4.8"	75 Hz
	X	X	X	X	2.5"	X	4.3"	77 Hz
	X	X	X	X	1.9"	X	3.5"	80 Hz
2.75 ft.³								
	12.5"	19.8"	10.3"	23.5"	X	25.7"	X	30 Hz
	9.8"	15.8"	7.9"	18.7"	29.5"	20.3"	X	33 Hz
	8.4"	13.7"	6.6"	16.2"	25.7"	17.5"	X	35 Hz
	7.2"	11.9"	5.6"	14.4"	22.6"	15.1"	X	37 Hz
	5.7"	9.7"	4.3"	11.5"	18.7"	12.2"	28.6"	40 Hz
	4.6"	7.9"	3.3"	9.4"	15.6"	9.9"	23.9"	43 Hz
	3.9"	7.0"	2.7"	8.3"	13.8"	8.6"	21.3"	45 Hz
	3.3"	6.1"	2.2"	7.2"	12.3"	7.4"	19.1"	47 Hz
	2.6"	5.0"	1.5"	5.9"	10.4"	6.0"	16.2"	50 Hz
	2.0"	4.1"	1.0"	4.9"	8.7"	4.8"	13.7"	53 Hz
	1.7"	3.6"	X	4.2"	7.8"	4.1"	12.3"	55 Hz
	1.3"	3.1"	X	3.7"	7.0"	3.4"	11.0"	57 Hz
	0.9"	2.5"	X	2.9"	5.9"	2.6"	9.4"	60 Hz
	X	1.9"	X	2.3"	4.9"	1.9"	8.0"	63 Hz
	X	1.6"	X	1.9"	4.3"	1.5"	7.1"	65 Hz
	X	1.3"	X	1.6"	3.8"	1.1"	6.3"	67 Hz
	X	0.9"	X	1.1"	3.1"	X	5.3"	70 Hz
	X	X	X	0.75"	2.5"	X	4.4"	73 Hz
	X	X	X	X	2.2"	X	3.8"	75 Hz
	X	X	X	X	1.8"	X	3.3"	77 Hz
	X	X	X	X	1.4"	X	2.7"	80 Hz

SOUNDSTREAM TECHNOLOGIES

Universal Tuning Chart

June, 1994

Vented Enclosure Alignments (UNLINED!)

ENCLOSURE VOLUME	(Number of Vents) & I.D. / Inside Diameter LENGTH of VENTS							TUNING FREQUENCY
(cubic feet)	(2) 3 inch	(3) 3 inch	(1) 4 inch	(2) 4 inch	(3) 4 inch	(1) 6 inch	(2) 6 inch	(Fb)
3.0 ft.³								
	11.2"	17.9"	9.1"	21.2"	X	23.1"	X	30 Hz
	8.7"	14.2"	7.0"	16.8"	26.7"	18.2"	X	33 Hz
	7.4"	12.2"	5.8"	14.5"	23.2"	15.6"	X	35 Hz
	6.3"	10.6"	4.8"	12.6"	20.3"	13.4"	X	37 Hz
	5.0"	8.6"	3.7"	10.2"	16.8"	10.8"	25.7"	40 Hz
	3.9"	7.0"	2.7"	8.3"	13.9"	8.6"	21.5"	43 Hz
	3.3"	6.1"	2.2"	7.2"	12.3"	7.4"	19.1"	45 Hz
	2.8"	5.3"	1.7"	6.3"	10.9"	6.4"	17.0"	47 Hz
	2.2"	4.3"	1.1"	5.1"	9.1"	5.1"	14.3"	50 Hz
	1.6"	3.5"	X	4.1"	7.7"	3.9"	12.1"	53 Hz
	1.3"	3.0"	X	3.6"	6.8"	3.3"	10.8"	55 Hz
	1.0"	2.6"	X	3.0"	6.0"	2.7"	9.6"	57 Hz
	X	2.0"	X	2.4"	5.0"	2.0"	8.1"	60 Hz
	X	1.5"	X	1.8"	4.1"	1.3"	6.8"	63 Hz
	X	1.2"	X	1.4"	3.6"	0.9"	6.0"	65 Hz
	X	0.9"	X	1.1"	3.1"	X	5.3"	67 Hz
	X	X	X	0.75"	2.5"	X	4.4"	70 Hz
	X	X	X	X	2.0"	X	3.5"	73 Hz
	X	X	X	X	1.6"	X	3.0"	75 Hz
	X	X	X	X	1.3"	X	2.6"	77 Hz
	X	X	X	X	0.9"	X	1.9"	80 Hz
3.25 ft.³								
	10.1"	16.2"	8.2"	19.2"	X	20.9"	X	30 Hz
	7.8"	12.8"	6.2"	15.2"	24.3"	16.4"	X	33 Hz
	6.6"	11.0"	5.1"	13.1"	21.1"	14.0"	X	35 Hz
	5.6"	9.5"	4.2"	11.3"	18.4"	12.0"	28.2"	37 Hz
	4.4"	7.7"	3.1"	9.1"	15.1"	9.5"	23.3"	40 Hz
	3.4"	6.2"	2.2"	7.4"	12.5"	7.6"	19.3"	43 Hz
	2.9"	5.4"	1.7"	6.4"	11.0"	6.5"	17.1"	45 Hz
	2.4"	4.7"	1.3"	5.5"	9.7"	5.5"	15.2"	47 Hz
	1.8"	3.7"	0.75"	4.4"	8.1"	4.3"	12.7"	50 Hz
	1.2"	3.0"	X	3.5"	6.7"	3.2"	10.7"	53 Hz
	1.0"	2.5"	X	3.0"	5.9"	2.6"	9.5"	55 Hz
	X	2.1"	X	2.5"	5.2"	2.1"	8.4"	57 Hz
	X	1.6"	X	1.9"	4.3"	1.4"	7.0"	60 Hz
	X	1.1"	X	1.4"	3.5"	0.8"	5.8"	63 Hz
	X	0.9"	X	1.0"	3.0"	X	5.1"	65 Hz
	X	X	X	0.75"	2.6"	X	4.4"	67 Hz
	X	X	X	X	2.0"	X	3.6"	70 Hz
	X	X	X	X	1.5"	X	2.8"	73 Hz
	X	X	X	X	1.2"	X	2.3"	75 Hz
	X	X	X	X	0.9"	X	1.9"	77 Hz
	X	X	X	X	X	X	1.3"	80 Hz

SOUNDSTREAM TECHNOLOGIES

Universal Tuning Chart

June, 1994

Vented Enclosure Alignments (UNLINED!)

ENCLOSURE VOLUME	(Number of Vents) & I.D. / Inside Diameter LENGTH of VENTS							TUNING FREQUENCY
(cubic feet)	(2) 3 inch	(1) 4 inch	(2) 4 inch	(3) 4 inch	(4) 4 inch	(1) 6 inch	(2) 6 inch	(Fb)
3.50 ft.³								
	14.5"	12.1"	27.0"	X	X	29.7"	X	25 Hz
	12.0"	9.9"	22.6"	X	X	24.7"	X	27 Hz
	9.2"	7.3"	17.6"	27.8"	X	19.1"	X	30 Hz
	7.1"	5.5"	13.9"	22.2"	X	14.9"	X	33 Hz
	6.0"	4.5"	12.0"	19.3"	26.7"	12.7"	29.5"	35 Hz
3.75 ft.³								
	13.3"	11.0"	25.0"	X	X	27.4"	X	25 Hz
	11.0"	9.0"	20.9"	X	X	22.8"	X	27 Hz
	8.4"	6.6"	16.2"	25.7"	X	17.5"	X	30 Hz
	6.4"	4.9"	12.7"	20.5"	28.3"	13.5"	X	33 Hz
	5.4"	4.0"	10.8"	17.7"	24.6"	11.5"	27.1"	35 Hz
4.00 ft.³								
	12.3"	10.1"	23.2"	X	X	25.4"	X	25 Hz
	10.1"	8.2"	19.3"	X	X	21.0"	X	27 Hz
	7.7"	6.0"	14.9"	23.8"	X	16.1"	X	30 Hz
	5.8"	4.4"	11.6"	18.9"	26.2"	12.4"	29.0"	33 Hz
	4.8"	3.5"	9.9"	16.3"	22.7"	10.4"	25.1"	35 Hz
4.25 ft.³								
	11.4"	9.3"	21.6"	X	X	23.6"	X	25 Hz
	9.4"	7.5"	18.0"	28.4"	X	19.5"	X	27 Hz
	7.0"	5.5"	13.8"	22.1"	X	14.8"	X	30 Hz
	5.3"	3.9"	10.7"	17.5"	24.4"	11.4"	26.9"	33 Hz
	4.4"	3.1"	9.1"	15.1"	21.1"	9.5"	23.2"	35 Hz
4.50 ft.³								
	10.6"	8.6"	20.2"	X	X	22.0"	X	25 Hz
	8.7"	6.9"	16.7"	26.6"	X	18.1"	X	27 Hz
	6.5"	5.0"	12.8"	20.7"	28.5"	13.7"	X	30 Hz
	4.8"	3.5"	9.9"	16.3"	22.7"	10.4"	25.1"	33 Hz
	4.0"	2.7"	8.4"	14.0"	20.0"	8.7"	21.6"	35 Hz
4.75 ft.³								
	9.9"	8.0"	18.9"	29.8"	X	20.5"	X	25 Hz
	8.1"	6.4"	15.7"	24.9"	X	16.9"	X	27 Hz
	6.0"	4.5"	11.9"	19.4"	26.8"	12.7"	29.6"	30 Hz
	4.4"	3.1"	9.2"	15.2"	21.3"	9.6"	23.4"	33 Hz
	3.6"	2.4"	7.7"	13.1"	18.4"	8.0"	20.2"	35 Hz

SOUNDSTREAM TECHNOLOGIES

Universal Tuning Chart

June, 1994

Vented Enclosure Alignments (UNLINED!)

ENCLOSURE VOLUME	(Number of Vents) & I.D. / Inside Diameter LENGTH of VENTS							TUNING FREQUENCY
(cubic feet)	(2) 3 inch	(3) 3 inch	(2) 4 inch	(3) 4 inch	(4) 4 inch	(1) 6 inch	(2) 6 inch	(Fb)
5.00 ft.³								
	9.3"	15.0"	17.8"	28.1"	X	19.3"	X	25 Hz
	7.5"	12.4"	14.7"	23.5"	X	15.8"	X	27 Hz
	5.5"	9.4"	11.1"	18.2"	25.2"	11.8"	27.8"	30 Hz
	4.1"	7.2"	8.5"	14.3"	20.2"	8.9"	22.0"	33 Hz
	3.3"	6.0"	7.2"	12.2"	17.2"	7.3"	18.9"	35 Hz
5.50 ft.³								
	8.2"	13.3"	15.8"	25.1"	X	17.0"	X	25 Hz
	6.6"	10.9"	13.0"	20.9"	28.9"	13.9"	X	27 Hz
	4.8"	8.2"	9.8"	16.1"	22.4"	10.3"	24.8"	30 Hz
	3.4"	6.2"	7.4"	12.6"	17.7"	7.6"	19.4"	33 Hz
	2.7"	5.2"	6.2"	10.7"	15.2"	6.2"	16.6"	35 Hz
6.00 ft.³								
	7.2"	11.9"	14.2"	22.7"	X	15.2"	X	25 Hz
	5.8"	9.8"	11.6"	18.8"	26.1"	12.3"	28.8"	27 Hz
	4.1"	7.3"	8.6"	14.4"	20.2"	9.0"	22.2"	30 Hz
	2.9"	5.4"	6.5"	11.1"	15.8"	6.6"	17.3"	33 Hz
	2.3"	4.5"	5.3"	9.4"	13.5"	5.3"	14.7"	35 Hz
6.50 ft.³								
	6.4"	10.8"	12.8"	20.6"	28.4"	13.6"	X	25 Hz
	5.1"	8.8"	10.4"	17.0"	23.7"	11.0"	26.1"	27 Hz
	3.6"	6.5"	7.7"	13.0"	18.2"	7.9"	20.0"	30 Hz
	2.5"	4.8"	5.7"	9.9"	14.2"	5.7"	15.5"	33 Hz
	1.9"	3.9"	4.6"	8.4"	12.1"	4.5"	13.1"	35 Hz
7.00 ft.³								
	5.8"	9.8"	11.6"	18.8"	26.0"	12.3"	28.8"	25 Hz
	4.5"	7.2"	9.4"	15.5"	21.6"	9.8"	23.8"	27 Hz
	3.1"	5.8"	6.8"	11.7"	16.6"	7.0"	18.2"	30 Hz
	2.1"	4.2"	5.0"	8.9"	12.7"	4.9"	14.0"	33 Hz
	1.5"	3.4"	4.0"	7.4"	10.9"	3.8"	11.8"	35 Hz
7.50 ft.³								
	5.2"	8.9"	10.5"	17.3"	24.0"	11.1"	26.5"	25 Hz
	4.0"	7.1"	8.5"	14.2"	19.9"	8.8"	21.9"	27 Hz
	2.7"	5.2"	6.1"	10.6"	15.2"	6.2"	16.6"	30 Hz
	1.7"	3.7"	4.4"	8.0"	11.7"	4.2"	12.6"	33 Hz
	1.2"	2.9"	3.5"	6.7"	9.8"	3.2"	10.6"	35 Hz

SOUNDSTREAM TECHNOLOGIES

Universal Tuning Chart

June, 1994

Vented Enclosure Alignments (UNLINED!)

ENCLOSURE VOLUME	(Number of Vents) & I.D. / Inside Diameter LENGTH of VENTS							TUNING FREQUENCY
(cubic feet)	(2) 3 inch	(3) 3 inch	(2) 4 inch	(3) 4 inch	(4) 4 inch	(1) 6 inch	(2) 6 inch	(Fb)
8.00 ft.³								
	9.0"	14.5"	17.3"	27.3"	X	18.7"	X	20 Hz
	6.1"	10.2"	12.1"	19.6"	27.1"	12.9"	X	23 Hz
	4.7"	8.1"	9.6"	15.9"	22.2"	10.1"	24.5"	25 Hz
	3.6"	6.5"	7.7"	13.0"	18.3"	8.0"	20.1"	27 Hz
	2.4"	4.6"	5.5"	9.7"	13.9"	5.5"	15.2"	30 Hz
8.50 ft.³								
	8.3"	13.5"	16.0"	25.5"	X	17.3"	X	20 Hz
	5.5"	9.4"	11.2"	18.2"	25.2"	11.8"	27.9"	23 Hz
	4.2"	7.5"	8.8"	14.7"	20.6"	9.2"	22.7"	25 Hz
	3.2"	5.9"	7.0"	12.0"	17.0"	7.2"	18.6"	27 Hz
	2.1"	4.2"	5.0"	8.9"	12.8"	4.9"	13.9"	30 Hz
9.00 ft.³								
	7.7"	12.6"	14.9"	23.8"	X	16.0"	X	20 Hz
	5.1"	8.7"	10.3"	16.9"	23.5"	10.9"	26.0"	23 Hz
	3.8"	6.9"	8.1"	13.7"	19.2"	8.4"	21.1"	25 Hz
	2.9"	5.4"	6.4"	11.1"	15.7"	6.5"	17.2"	27 Hz
	1.8"	3.8"	4.5"	8.3"	11.8"	4.3"	12.8"	30 Hz
9.50 ft.³								
	7.1"	11.7"	13.9"	22.3"	X	14.9"	X	20 Hz
	4.7"	8.1"	9.6"	15.8"	22.0"	10.1"	24.3"	23 Hz
	3.5"	6.3"	7.5"	12.7"	17.9"	7.7"	19.6"	25 Hz
	2.6"	4.9"	5.9"	10.3"	14.7"	5.9"	16.0"	27 Hz
	1.5"	3.4"	4.0"	7.5"	10.9"	3.8"	11.8"	30 Hz
10.0 ft.³								
	6.6"	11.0"	13.0"	21.0"	29.0"	13.9"	X	20 Hz
	4.3"	7.5"	8.9"	14.8"	20.7"	9.3"	22.8"	23 Hz
	3.2"	5.8"	6.9"	11.8"	16.8"	7.1"	18.4"	25 Hz
	2.3"	4.5"	5.4"	9.5"	13.7"	5.3"	14.9"	27 Hz
	1.3"	3.0"	3.6"	6.9"	10.1"	3.4"	10.9"	30 Hz
10.5 ft.³								
	6.1"	10.3"	12.2"	19.8"	27.3"	13.0"	X	20 Hz
	3.9"	7.0"	8.3"	13.9"	19.5"	8.6"	21.4"	23 Hz
	2.9"	5.4"	6.4"	11.1"	15.7"	6.5"	17.2"	25 Hz
	2.1"	4.2"	4.9"	8.9"	12.8"	4.9"	13.9"	27 Hz
	1.1"	2.7"	3.3"	6.3"	9.4"	3.0"	10.1"	30 Hz

QUICK REFERENCE GUIDE

Quick Reference Range Charts

This very useful chart shows the range of volumes in which each of our subwoofers work. Three types of enclosures are listed, sealed, vented and bandpass. Simply, find the woofer you wish to use and view the range of volumes that it can occupy. These charts show volumes occupied by a single driver.

This chart is helpful when one wishes to determine the range of box sizes a particular woofer requires.

Example:

In order to find the volume a Granite 10 needs in a vented box, first find the vented section in the middle of the page. Locate the GR-10 woofer and view the volume range that is suggested. Here we see it to be from 1.5 ft^3 to 2.5 ft^3.

If you already have a box and want to know which woofers can be used, simply locate the volume at the top of the page. Now follow this column down to view the speakers and enclosure types that will work.

Quick Reference Volume charts

These charts show a range of suggested Designs that can be used in a particular size box. To use these charts, find the volume of the box you wish to use. Then locate at the top right hand corner, the page or pages that show the volume you wish to use. Each of these ranges give multiple enclosure types and offer music type suggestions. While these are only suggestions, they are based on actual enclosures and you will find that they are quite useful. Please remember that the volumes on this chart are total external volumes. This includes all external dimensions.

Example:

You have a 3 ft^3 available and wish to build a woofer enclosure for Rock and Rap music. Turn to the page that shows ≤3 ft^3 boxes. We see that for Rock or Rap music, three suggestions are given: design #'s S8EN8, S10REN3 and S10REN7. S8EN8 is a Sealed bandpass enclosure which uses Iso-baric mounted drivers. We can use (2) of these enclosures and still fit into our 3 ft^3 space. S10EN3 is a Vented bandpass enclosure using (1) SS-10R woofer. S10REN7 is a Sealed bandpass enclosure using (1) SS-10R woofer. Any of these enclosures will work great for our intended application.

SOUNDSTREAM®
TECHNOLOGIES

Quick Reference Range Chart

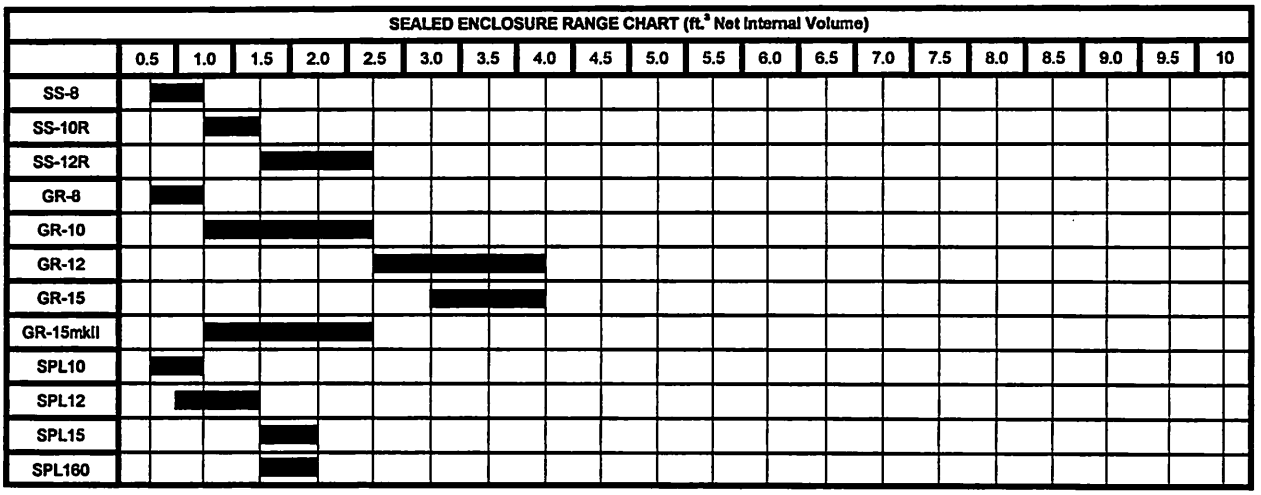

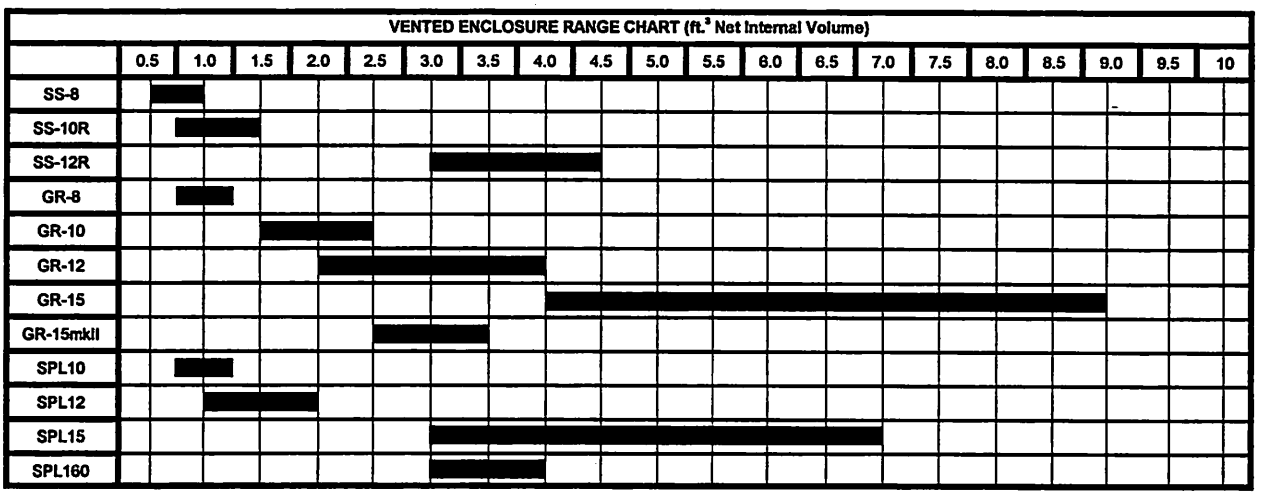

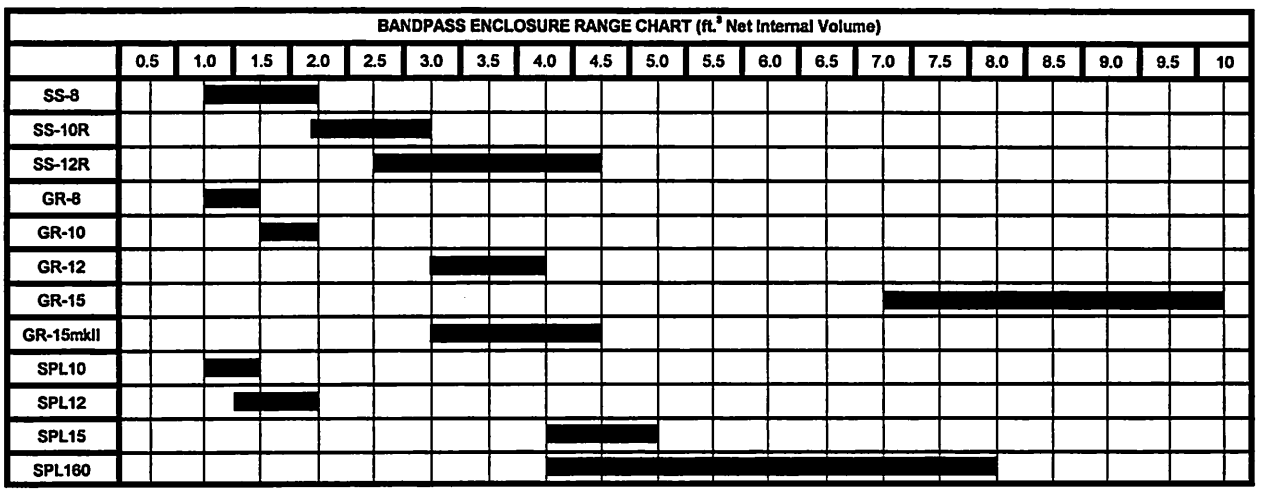

NOTE: All volume ranges are for single (1) driver configurations and do not include Isobaric versions.

Quick Reference by Volume

≤1.0ft³ Total External Volume				
Driver	Qty.	Enclosure Type	Design No.	Music Type
SS-8	1	Sealed	S8EN3	Midbass
GR-8	1	Sealed	G8EN2	Midbass
SPL10	1	Sealed	SPL10EN1	Good small enclosure

Quick Reference by Volume

≤1.5ft³ Total External Volume				
Driver	Qty.	Enclosure Type	Design No.	Music Type
SS-8	1	Sealed	S8EN4	Classical or Jazz
SS-8	1	Vented	S8EN5	Rock or Rap
SS-8	1	Iso-Sealed Bandpass #23	S8EN8	Rock or Rap
SS-8	1	Iso-Vented Bandpass #19	S8EN10	Rock or Rap
SS-8	1	Sealed Bandpass	S8EN11	Good small enclosure
GR-8	1	Sealed	G8EN3	Classical or Jazz
SPL10	1	Sealed	SPL10EN2	Good all around enclosure
SPL10	1	Vented	SPL10EN4	Good small enclosure

Quick Reference by Volume

≤2.0ft³ Total External Volume				
Driver	Qty.	Enclosure Type	Design No.	Music Type
SS-8	1	Vented Bandpass #19	S8EN2	Rock or Rap
SS-8	2	Sealed	S8EN3	Midbass
SS-8	1	Vented	S8EN6	Good all around enclosure
SS-8	1	Sealed Bandpass #21	S8EN7	Good all around enclosure
SS-8	1	Vented Bandpass	S8EN12	Rock or Rap
SS-10R	1	Vented	S10REN10	Good for all kinds of music
GR-8	2	Sealed	G8EN2	Midbass
GR-8	1	Vented	G8EN4	Good all around enclosure
GR-8	1	Vented Bandpass #28	G8EN5	Rock or Rap
GR-8	1	Vented Bandpass #29	G8EN6	Good all around enclosure
GR-8	1	Sealed Bandpass #26	G8EN7	Good all around enclosure
GR-8	1	Iso-Sealed Bandpass #25	G8EN8	Rock or Rap
GR-8	1	Sealed Bandpass #27	G8EN9	Rock or Rap
GR-8	1	Vented Bandpass	G8EN10	Rock or Rap
GR-10	1	Sealed	G10EN4	Good small enclosure
GR15mkII	1	Sealed	GR15MK2EN1	Good small enclosure
SPL10	2	Sealed	SPL10EN1	Good small enclosure
SPL10	1	Sealed	SPL10EN3	High SPL
SPL10	1	Vented	SPL10EN5	Rock or Rap
SPL10	1	Sealed Bandpass #51	SPL10EN7	Rock or Rap
SPL12	1	Sealed	SPL12EN1	Good small enclosure
SPL12	1	Vented	SPL12EN3	Good all around enclosure

Quick Reference by Volume

≤2.5ft³ Total External Volume				
Driver	Qty.	Enclosure Type	Design No.	Music Type
SS-8	3	Sealed	S8EN3	Midbass
SS-8	2	Iso-Vented Bandpass #19	S8EN10	Rock or Rap
SS-8	2	Sealed Bandpass	S8EN11	Good all around enclosure
SS-10R	1	Sealed	S10REN9	Classical, Jazz or Rock
GR-8	3	Sealed	G8EN2	Midbass
GR-10	1	Sealed Bandpass #1	G10EN2	Rock or Rap
GR-10	1	Vented	G10EN6	Good all around enclosure
GR-10	1	Vented Bandpass #4.1	G10EN8	Rock or Rap
SPL10	1	Sealed Bandpass #50	SPL10EN6	Rock or Rap
SPL12	1	Sealed	SPL12EN2	Good all around enclosure
SPL12	1	Sealed Bandpass #52	SPL12EN5	Rock or Rap
SPL15	1	Sealed	SPL15EN1	High SPL
SPL160	1	Sealed	SPL160EN1	High SPL

Quick Reference by Volume

≤3.0ft³ Total External Volume				
Driver	Qty.	Enclosure Type	Design No.	Music Type
SS-8	2	Sealed	S8EN4	Classical or Jazz
SS-8	2	Vented	S8EN5	Rock or Rap
SS-8	2	Iso-Sealed Bandpass #23	S8EN8	Rock or Rap
SS-10R	1	Vented Bandpass #34	S10REN3	Rock or Rap
SS-10R	1	Vented Bandpass #36	S10REN5	Good all around enclosure
SS-10R	1	Sealed Bandpass #32	S10REN7	Rock or Rap
SS-12R	1	Sealed	S12REN1	Classical, Jazz or Rock
GR-8	2	Sealed	G8EN3	Classical or Jazz
GR-10	1	Vented	G10EN7	Classical, Jazz or Rock
GR-12	1	Iso-Vented Bandpass #11	G12EN5	Good all around enclosure
SPL10	3	Sealed	SPL10EN1	Good small enclosure
SPL10	2	Sealed	SPL10EN2	Good all around enclosure
SPL10	2	Vented	SPL10EN4	Good small enclosure
SPL12	1	Vented	SPL12EN4	Rock or Rap
SPL15	1	Sealed	SPL15EN2	Good all around enclosure
SPL160	1	Sealed	SPL160EN2	Good all around enclosure

Quick Reference by Volume

≤3.5ft³ Total External Volume				
Driver	Qty.	Enclosure Type	Design No.	Music Type
SS-8	4	Sealed	S8EN3	Midbass
SS-8	2	Vented	S8EN6	Good all around enclosure
SS-8	2	Sealed Bandpass #21	S8EN7	Good all around enclosure
SS-8	1	SBP (2 woofer / 3 chamber)	S8EN9	Good all around enclosure
SS-8	3	Sealed Bandpass	S8EN11	Good all around enclosure
SS-8	2	Vented Bandpass	S8EN12	Rock or Rap
SS-10R	1	Vented Bandpass #35	S10REN4	Rock or Rap
SS-10R	1	Sealed Bandpass #31	S10REN6	Rock or Rap
GR-8	4	Sealed	G8EN2	Midbass
GR-8	2	Vented	G8EN4	Good all around enclosure
GR-8	2	Sealed Bandpass #26	G8EN7	Good all around enclosure
GR-8	2	Sealed Bandpass #27	G8EN9	Rock or Rap
GR-10	2	Sealed	G10EN4	Good small enclosure
GR-10	1	Sealed	G10EN5	Classical or Jazz
GR-10	1	Vented Bandpass	G10EN10	Rock or Rap
SPL10	2	Sealed	SPL10EN3	High SPL
SPL10	2	Vented	SPL10EN5	Rock or Rap
SPL10	2	Sealed Bandpass #51	SPL10EN7	Rock or Rap
SPL12	2	Sealed	SPL12EN1	Good small enclosure
SPL12	2	Vented	SPL12EN3	Good all around enclosure
SPL12	1	Sealed Bandpass #53	SPL12EN6	Rock or Rap

SOUNDSTREAM® TECHNOLOGIES

≤4.0ft³

Quick Reference by Volume

≤4.0ft³ Total External Volume				
Driver	Qty.	Enclosure Type	Design No.	Music Type
SS-8	1	SBP #19 (2 woofer version)	S8EN1	Rock or Rap
SS-8	2	Sealed Bandpass #19	S8EN2	Rock or Rap
SS-8	3	Vented	S8EN5	Rock or Rap
SS-8	3	Iso-Sealed Bandpass #23	S8EN8	Rock or Rap
SS-8	3	Iso-Vented Bandpass #19	S8EN10	Rock or Rap
SS-10R	1	Vented (2 woofer version)	S10REN1	Good all around enclosure
SS-10R	1	Sealed Bandpass #33	S10REN8	Good all around enclosure
SS-10R	2	Vented	S10REN10	Good all around enclosure
SS-12R	1	Sealed Bandpass #37	S12REN7	Rock or Rap
SS-12R	1	Iso-Sealed Bandpass #39	S12REN9	Rock or Rap
GR-8	2	Vented Bandpass #28	G8EN5	Rock or Rap
GR-8	2	Vented Bandpass #29	G8EN6	Good all around enclosure
GR-8	2	Iso-Sealed Bandpass #25	G8EN8	Rock or Rap
GR-8	2	Vented Bandpass	G8EN10	Rock or Rap
GR-10	1	Sealed Bandpass	G10EN9	Good all around enclosure
GR-12	1	Sealed	G12EN2	Classical, Jazz or Rock
GR-12	1	Vented	G12EN3	Classical, Jazz or Rock
GR-12	1	Sealed Bandpass	G12EN9	Good all around enclosure
GR15mkII	2	Sealed	GR15MK2EN1	Good small enclosure
GR15mkII	1	Sealed	GR15MK2EN2	Classical or Jazz
GR15mkII	1	Vented	GR15MK2EN3	Good small enclosure
SPL10	4	Sealed	SPL10EN1	Good small enclosure
SPL10	3	Sealed	SPL10EN2	Good all around enclosure

Quick Reference by Volume

≤4.5ft³ Total External Volume				
Driver	Qty.	Enclosure Type	Design No.	Music Type
SS-8	3	Sealed	S8EN4	Classical or Jazz
SS-8	4	Sealed Bandpass	S8EN11	Good all around enclosure
SS-10R	1	SBP(2 woofer / 3 chamber)	S10REN2	Rock or Rap
SS-10R	2	Sealed	S10REN9	Classical, Jazz or Rock
SS-12R	1	Vented	S12REN3	Good all around enclosure
GR-8	1	SBP(2 woofer / 3 chamber)	G8EN1	Rock or Rap
GR-8	3	Sealed	G8EN3	Classical or Jazz
GR-10	2	Sealed Bandpass #1	G10EN2	Rock or Rap
GR-10	1	SBP (2 woofer / 3 chamber)	G10EN3	Rock or Rap
GR-10	2	Vented	G10EN6	Good all around enclosure
GR-12	1	Sealed Bandpass #7	G12EN6	Rock or Rap
GR-15	1	Sealed	G15EN2	Jazz or Rock
SPL10	3	Vented	SPL10EN4	Good small enclosure
SPL12	2	Sealed	SPL12EN2	Good all around enclosure
SPL12	2	Sealed Bandpass #52	SPL12EN5	Rock or Rap

Quick Reference by Volume

≤5.0ft³ Total External Volume				
Driver	Qty.	Enclosure Type	Design No.	Music Type
SS-8	3	Vented	S8EN6	Good all around enclosure
SS-8	3	Sealed Bandpass #21	S8EN7	Good all around enclosure
SS-8	4	Iso-Vented Bandpass #19	S8EN10	Rock or Rap
GR-8	3	Vented	G8EN4	Classical, Jazz or Rock
GR-8	3	Sealed Bandpass #26	G8EN7	Good all around enclosure
GR-8	3	Sealed Bandpass #27	G8EN9	Rock or Rap
GR-10	3	Sealed	G10EN4	Good small enclosure
GR-10	2	Sealed Bandpass #4.1	G10EN8	Rock or Rap
GR-12	1	Vented Bandpass #10	G12EN4	Rock or Rap
GR15mkII	1	Sealed Bandpass #60	GR15MK2EN6	Rap
SPL10	3	Sealed	SPL10EN3	High SPL
SPL10	2	Sealed Bandpass #50	SPL10EN6	Rock or Rap
SPL10	3	Sealed Bandpass #51	SPL10EN7	Rock or Rap
SPL12	3	Sealed	SPL12EN1	Good small enclosure
SPL15	2	Sealed	SPL15EN1	High SPL
SPL15	1	Vented	SPL15EN3	Good all around enclosure
SPL160	2	Sealed	SPL160EN1	High SPL
SPL160	1	Vented	SPL160EN3	Good small enclosure

SOUNDSTREAM® TECHNOLOGIES

≤5.5ft³

Quick Reference by Volume

≤5.5ft³ Total External Volume				
Driver	Qty.	Enclosure Type	Design No.	Music Type
SS-8	4	Vented	S8EN5	Rock or Rap
SS-8	4	Iso-Sealed Bandpass #23	S8EN8	Rock or Rap
SS-8	3	Vented Bandpass	S8EN12	Rock or Rap
SS-12R	1	Sealed Bandpass #38	S12REN8	Good all around enclosure
GR-12	1	Iso-SBP (Tri-chamber)	G12EN8	Rock or Rap
GR-15	1	Sealed	G15EN3	Classical or Jazz
GR15mkII	3	Sealed	GR15MK2EN1	Good small enclosure
GR15mkII	1	Vented	GR15MK2EN4	Good all around enclosure
SPL10	4	Sealed	SPL10EN2	Good all around enclosure
SPL10	4	Vented	SPL10EN4	Good small enclosure
SPL10	3	Vented	SPL10EN5	Rock or Rap
SPL12	3	Vented	SPL12EN3	Good all around enclosure
SPL15	1	Sealed Bandpass #55	SPL15EN6	Rap
SPL160	2	Sealed	SPL160EN2	Good all around enclosure
SPL160	1	Vented	SPL160EN4	Rock or Rap

Quick Reference by Volume

≤6.0ft³ Total External Volume				
Driver	Qty.	Enclosure Type	Design No.	Music Type
SS-8	3	Vented Bandpass #19	S8EN2	Rock or Rap
SS-8	4	Sealed	S8EN4	Classical or Jazz
SS-10R	2	Vented Bandpass #34	S10REN3	Rock or Rap
SS-10R	2	Vented Bandpass #36	S10REN5	Good all around enclosure
SS-10R	2	Sealed Bandpass #32	S10REN7	Rock or Rap
SS-10R	3	Vented	S10REN10	Good all around enclosure
SS-12R	2	Sealed	S12REN1	Classical, Jazz or Rock
SS-12R	1	Vented	S12REN2	Classical, Jazz or Rock
SS-12R	1	Vented Bandpass #40	S12REN4	Rock or Rap
SS-12R	1	Sealed Bandpass #41	S12REN5	Rock or Rap
GR-8	4	Sealed	G8EN3	Classical or Jazz
GR-8	3	Vented Bandpass #28	G8EN5	Rock or Rap
GR-8	3	Vented Bandpass #29	G8EN6	Good all around enclosure
GR-8	3	Iso-Sealed Bandpass #25	G8EN8	Rock or Rap
GR-8	3	Vented Bandpass	G8EN10	Rock or Rap
GR-10	2	Vented	G10EN7	Classical, Jazz or Rock
GR-12	2	Iso-Vented Bandpass #11	G12EN5	Good all around enclosure
GR-15	1	Iso-Sealed Bandpass #14	G15EN8	Rock or Rap
GR15mkII	1	Sealed Bandpass #59	GR15MK2EN5	Rock or Rap
SPL12	2	Vented	SPL12EN4	Rock or Rap
SPL15	2	Sealed	SPL15EN2	Good all around enclosure
SPL160	1	Sealed Bandpass #58	SPL160EN7	Rap

Quick Reference by Volume

≤6.5ft³ Total External Volume				
Driver	Qty.	Enclosure Type	Design No.	Music Type
SS-8	4	Vented	S8EN6	Good all around enclosure
SS-10R	2	Vented Bandpass #35	S10REN4	Rock or Rap
SS-10R	2	Sealed Bandpass #31	S10REN6	Rock or Rap
SS-12R	1	Vented Bandpass #42	S12REN6	Rock or Rap
GR-8	4	Vented	G8EN4	Classical, Jazz or Rock
GR-10	4	Sealed	G10EN4	Good all around enclosure
SPL10	4	Sealed	SPL10EN3	High SPL
SPL10	4	Sealed Bandpass #51	SPL10EN7	Rock or Rap
SPL12	4	Sealed	SPL12EN1	Good small enclosure
SPL12	2	Sealed Bandpass #53	SPL12EN6	Rock or Rap

Quick Reference by Volume

≤7.0ft³ Total External Volume				
Driver	Qty.	Enclosure Type	Design No.	Music Type
SS-8	4	Sealed Bandpass #21	S8EN7	Good all around enclosure
SS-8	2	SBP (2 woofer / 3 chamber)	S8EN9	Good all around enclosure
SS-8	4	Vented Bandpass	S8EN12	Rock or Rap
SS-10R	3	Sealed	S10REN9	Classical, Jazz or Rock
GR-8	4	Sealed Bandpass #26	G8EN7	Good all around enclosure
GR-8	4	Sealed Bandpass #27	G8EN9	Rock or Rap
GR-10	3	Sealed Bandpass #1	G10EN2	Rock or Rap
GR-10	2	Sealed	G10EN5	Classical, Jazz or Rock`
GR-10	3	Vented	G10EN6	Good all around enclosure
GR-10	2	Vented Bandpass	G10EN10	Rock or Rap
SPL10	4	Vented	SPL10EN5	Rock or Rap
SPL10	3	Sealed Bandpass #50	SPL10EN6	Rock or Rap
SPL12	3	Sealed	SPL12EN2	Good all around enclosure
SPL12	4	Vented	SPL12EN3	Good all around enclosure
SPL12	3	Sealed Bandpass #52	SPL12EN5	Rock or Rap
SPL15	3	Sealed	SPL15EN1	High SPL
SPL160	1	Sealed Bandpass #57	SPL160EN6	Rock or Rap

SOUNDSTREAM® TECHNOLOGIES

≤7.5ft³

Quick Reference by Volume

≤7.5ft³ Total External Volume				
Driver	Qty.	Enclosure Type	Design No.	Music Type
SS-8	2	VBP #19 (2 woofer version)	S8EN1	Rock or Rap
GR-10	3	Vented Bandpass #4.1	G10EN8	Rock or Rap
GR-12	2	Vented	G12EN3	Classical, Jazz or Rock
GR-12	2	Sealed Bandpass	G12EN9	Good all around enclosure
GR-15	1	Iso-Sealed Bandpass	G15EN1	Home Theater Subwoofer
GR-15	1	Iso-Vented	G15EN5	Good all around enclosure
GR15mkII	4	Sealed	GR15MK2EN1	Good small enclosure
GR15mkII	2	Sealed	GR15MK2EN2	Classical or Jazz
GR15mkII	2	Vented	GR15MK2EN3	Good small enclosure
SPL15	1	Sealed Bandpass #54	SPL15EN5	Rock or Rap
SPL160	3	Sealed	SPL160EN1	High SPL

Quick Reference by Volume

≤8.0ft³ Total External Volume				
Driver	Qty.	Enclosure Type	Design No.	Music Type
SS-8	4	Vented Bandpass #19	S8EN2	Rock or Rap
SS-10R	2	Vented (2 woofer version)	S10REN1	Good all around enclosure
SS-10R	2	Sealed Bandpass #33	S10REN8	Good all around enclosure
SS-10R	4	Vented	S10REN10	Good all around enclosure
SS-12R	2	Sealed Bandpass #37	S12REN7	Rock or Rap
SS-12R	2	Iso-Sealed Bandpass #39	S12REN9	Rock or Rap
SS-12R	1	SBP(2 woofer / 3 chamber)	S12REN10	Rock or Rap
GR-8	4	Vented Bandpass #28	G8EN5	Rock or Rap
GR-8	4	Vented Bandpass #29	G8EN6	Good all around enclosure
GR-8	4	Iso-Sealed Bandpass #25	G8EN8	Rock or Rap
GR-8	4	Vented Bandpass	G8EN10	Rock or Rap
GR-10	1	SBP #1 (4 woofer version)	G10EN1	Rock or Rap
GR-10	2	Sealed Bandpass	G10EN9	Good all around enclosure
GR-12	1	SBP (2 woofer / 3 chamber)	G12EN1	Rock or Rap
GR-12	2	Sealed	G12EN2	Classical, Jazz or Rock
GR-15	1	Vented Bandpass	G15EN9	Rock or Rap

SOUNDSTREAM® TECHNOLOGIES

≤8.5ft³

Quick Reference by Volume

≤8.5ft³ Total External Volume				
Driver	Qty.	Enclosure Type	Design No.	Music Type
SS-12R	2	Vented	S12REN3	Good all around enclosure
GR-10	2	SBP (2 woofer / 3 chamber)	G10EN3	Rock or Rap
GR-12	2	Sealed Bandpass #7	G12EN6	Rock or Rap
GR-15	2	Sealed	G15EN2	Classical, Jazz or Rock
GR-15	1	Vented Bandpass	G15EN11	Rock or Rap
SPL160	3	Sealed	SPL160EN2	Good all around enclosure

Quick Reference by Volume

≤9.0ft³ Total External Volume				
Driver	Qty.	Enclosure Type	Design No.	Music Type
SS-10R	2	SBP (2 woofer / 3 chamber)	S10REN2	Rock or Rap
SS-10R	3	Vented Bandpass #34	S10REN3	Rock or Rap
SS-10R	3	Vented Bandpass #36	S10REN5	Good all around enclosure
SS-10R	3	Sealed Bandpass #32	S10REN7	Rock or Rap
SS-10R	4	Sealed	S10REN9	Classical, Jazz or Rock
SS-12R	3	Sealed	S12REN1	Classical, Jazz or Rock
GR-8	2	SBP (2 woofer / 3 chamber)	G8EN1	Rock or Rap
GR-10	4	Sealed Bandpass #1	G10EN2	Rock or Rap
GR-10	4	Vented	G10EN6	Good all around enclosure
GR-10	3	Vented	G10EN7	Classical, Jazz or Rock
GR-12	3	Iso-Vented Bandpass #11	G12EN5	Good all around enclosure
GR-12	1	SBP (2 woofer / 3 chamber)	G12EN7	Rock or Rap
GR-15	1	Vented	G15EN4	Good all around enclosure
GR-15	1	Iso-Vented Bandpass #17	G15EN6	Rock or Rap
SPL12	4	Sealed	SPL12EN2	Good all around enclosure
SPL12	3	Vented	SPL12EN4	Rock or Rap
SPL12	4	Sealed Bandpass #52	SPL12EN5	Rock or Rap
SPL15	3	Sealed	SPL15EN2	Good all around enclosure
SPL15	1	Vented	SPL15EN4	Rock or Rap

Quick Reference by Volume

≤9.5ft³ Total External Volume				
Driver	Qty.	Enclosure Type	Design No.	Music Type
SS-10R	3	Vented Bandpass #35	S10REN4	Rock or Rap
SPL10	4	Sealed Bandpass #50	SPL10EN6	Rock or Rap
SPL12	3	Sealed Bandpass #53	SPL12EN6	Rock or Rap
SPL15	4	Sealed	SPL15EN1	High SPL
SPL160	4	Sealed	SPL160EN1	High SPL
SPL160	2	Vented	SPL160EN3	Good small enclosure

Quick Reference by Volume

≤10.0ft³ Total External Volume				
Driver	Qty.	Enclosure Type	Design No.	Music Type
SS-8	3	SBP (2 woofer / 3 chamber)	S8EN9	Good all around enclosure
SS-10R	3	Sealed Bandpass #31	S10REN6	Rock or Rap
GR-10	4	Vented Bandpass #4.1	G10EN8	Rock or Rap
GR-12	2	Vented Bandpass #10	G12EN4	Rock or Rap
GR15mkII	2	Sealed Bandpass #60	GR15MK2EN6	Rap
SPL15	2	Vented	SPL15EN3	Good all around enclosure

Quick Reference by Volume

≤10.5ft³ Total External Volume				
Driver	Qty.	Enclosure Type	Design No.	Music Type
SS-12R	2	Sealed Bandpass #28	S12REN8	Rock or Rap
GR-10	3	Sealed	G10EN5	Classical, Jazz or Rock
GR-10	3	Vented Bandpass	G10EN10	Rock or Rap
GR-15	1	Sealed Bandpass #13	G15EN7	Rock or Rap
GR15mkII	2	Vented	GR15MK2EN4	Good all around enclosure
SPL15	2	Sealed Bandpass #55	SPL15EN6	Rap

Quick Reference by Volume

≤11.0ft³ Total External Volume				
Driver	Qty.	Enclosure Type	Design No.	Music Type
SS-8	3	VBP#19(2 woofer/3chamber)	S8EN1	Rock or Rap
SS-12R	1	SBP #11 (3 woofer version)	S12REN11	Rock or Rap
GR-12	3	Vented	G12EN3	Good all around enclosure
GR-12	2	Iso-SBP (Tri-chamber)	G12EN8	Rock or Rap
GR-15	2	Sealed	G15EN3	Classical, Jazz or Rock
GR15mkII	3	Sealed	GR15MK2EN2	Classical or Jazz
SPL160	4	Sealed	SPL160EN2	Good all around enclosure
SPL160	2	Vented	SPL160EN4	Rock or Rap
SPL160	1	Sealed Bandpass #56	SPL160EN5	Rock or Rap

SOUNDSTREAM® TECHNOLOGIES

≤11.5ft³

Quick Reference by Volume

≤11.5ft³ Total External Volume				
Driver	Qty.	Enclosure Type	Design No.	Music Type
SS-12R	4	Sealed	S12REN1	Classical, Jazz or Rock
SS-12R	2	Sealed Bandpass #41	S12REN5	Rock or Rap
SS-12R	3	Sealed Bandpass #37	S12REN7	Rock or Rap
GR-10	4	Vented	G10EN7	Classical, Jazz or Rock
GR-10	3	Sealed Bandpass	G10EN9	Good all around enclosure
GR-12	3	Sealed Bandpass	G12EN9	Good all around enclosure
GR-15	2	Iso-Sealed Bandpass #14	G15EN8	Rock or Rap
GR15mkII	3	Vented	GR15MK2EN3	Good small enclosure
SPL160	2	Sealed Bandpass #58	SPL160EN7	Rap

Quick Reference by Volume

≤12.0ft³ Total External Volume				
Driver	Qty.	Enclosure Type	Design No.	Music Type
SS-10R	3	Vented (2 woofer version)	S10REN1	Good all around enclosure
SS-10R	4	Vented Bandpass #34	S10REN3	Rock or Rap
SS-10R	4	Vented Bandpass #36	S10REN5	Good all around enclosure
SS-10R	4	Sealed Bandpass #32	S10REN7	Rock or Rap
SS-10R	3	Sealed Bandpass #33	S10REN8	Good all around enclosure
SS-12R	2	Vented	S12REN2	Classical, Jazz or Rock
SS-12R	2	Vented Bandpass #40	S12REN4	Rock or Rap
SS-12R	3	Iso-Sealed Bandpass #39	S12REN9	Rock or Rap
GR-12	3	Sealed	G12EN2	Classical, Jazz or Rock
GR-12	4	Iso-Vented Bandpass #11	G12EN5	Good all around enclosure
GR15mkII	2	Sealed Bandpass #59	GR15MK2EN5	Rock or Rap
SPL12	4	Vented	SPL12EN4	Rock or Rap
SPL15	4	Sealed	SPL15EN2	Good all around enclosure

SOUNDSTREAM®
TECHNOLOGIES

CAD DRAWINGS

The following CAD designs have been made to help you choose the correct woofer and enclosure for your application. We have provided a minimum of 10 designs for each of the Soundstream woofers. These designs range from simple sealed enclosures to multi-driver, compound bandpass designs. We have tried to give a broad representation of enclosure types and sizes. If one of these enclosures does not fit your needs, simply re configure the dimensions to fit your application. The total occupied volume of the design is given in the top right corner of the design sheet. A variety of information is given with each design. Five different information areas appear in each design.

Top left section
Woofer type:
Enclosure type:
Music type:

Top right section
Drawing of box type with TOTAL OUTSIDE volume given.

Middle section
CAD drawing of complete box with dimensions, port lengths and box volumes.

Bottom left section
Frequency response Graph

Bottom right section
Application notes for your comments on construction and performance.

Drawing code number.

SOUNDSTREAM®
TECHNOLOGIES

Woofer: Reference SS-8
Enclosure Type: Vented Bandpass #19 (2 woofer version)
Music Type: High SPL; Rock or Rap

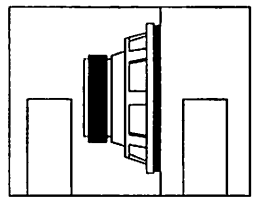
3.59 cu. ft. o.d.

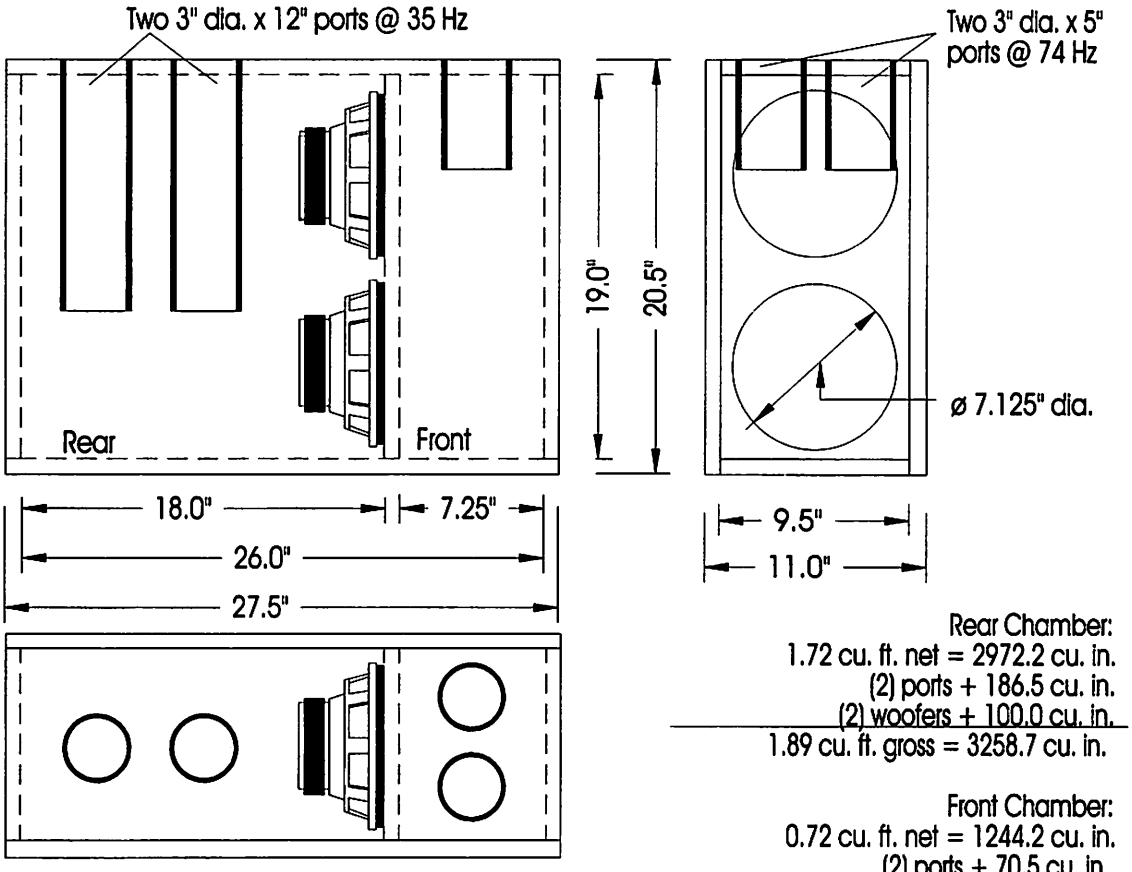

NOTE: Line all walls with 1" figerglass insulation, or similar material.

Rear Chamber:
1.72 cu. ft. net = 2972.2 cu. in.
(2) ports + 186.5 cu. in.
(2) woofers + 100.0 cu. in.
1.89 cu. ft. gross = 3258.7 cu. in.

Front Chamber:
0.72 cu. ft. net = 1244.2 cu. in.
(2) ports + 70.5 cu. in.
0.76 cu. ft. gross = 1314.7 cu. in.

SOUNDSTREAM® TECHNOLOGIES
R & D Loudspeaker Performance Projection
SPL vs. Frequency (2.0 volts input / 1 meter)
Response includes 12 dB / Oct LP @ 100 Hz

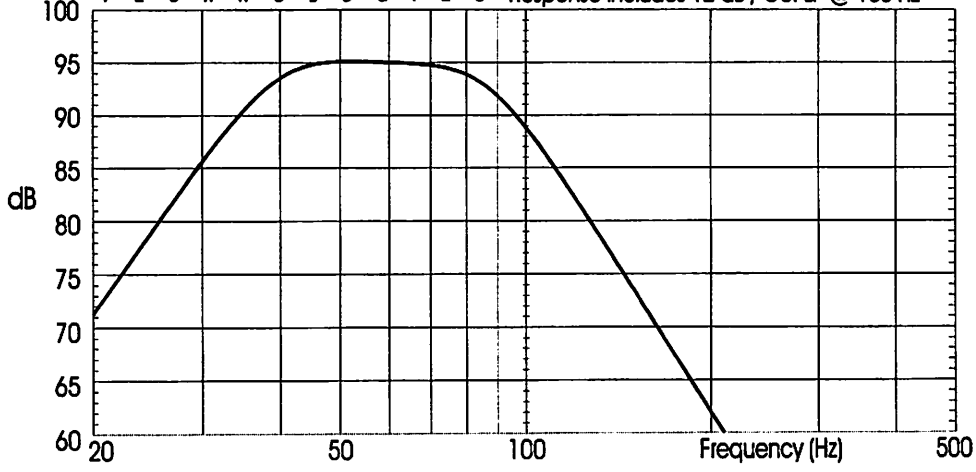

Application Notes:

CODE: S8EN1

SOUNDSTREAM®
TECHNOLOGIES

Woofer: Reference SS-8
Enclosure Type: Vented Bandpass #19
Music Type: High SPL; Rock or Rap

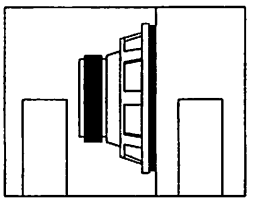
1.98 cu. ft. o.d.

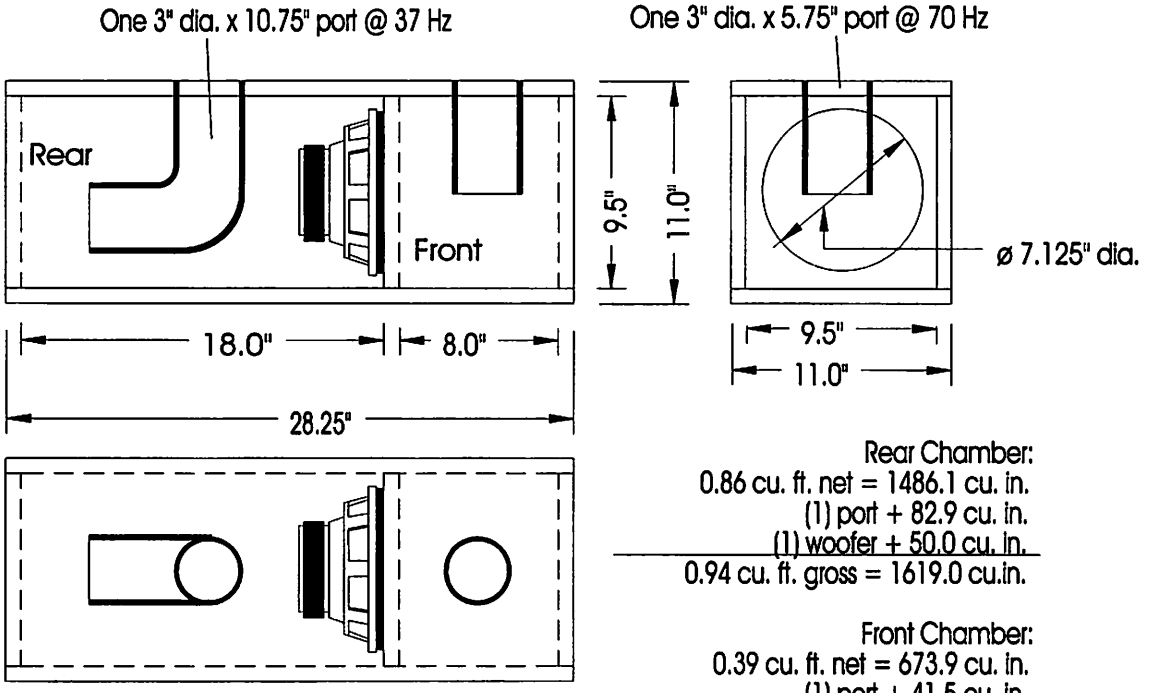

Rear Chamber:
0.86 cu. ft. net = 1486.1 cu. in.
(1) port + 82.9 cu. in.
(1) woofer + 50.0 cu. in.
0.94 cu. ft. gross = 1619.0 cu.in.

Front Chamber:
0.39 cu. ft. net = 673.9 cu. in.
(1) port + 41.5 cu. in.
0.41 cu. ft. gross = 715.4 cu. in.

NOTE: Line all walls with 1" fiberglass or similar material!

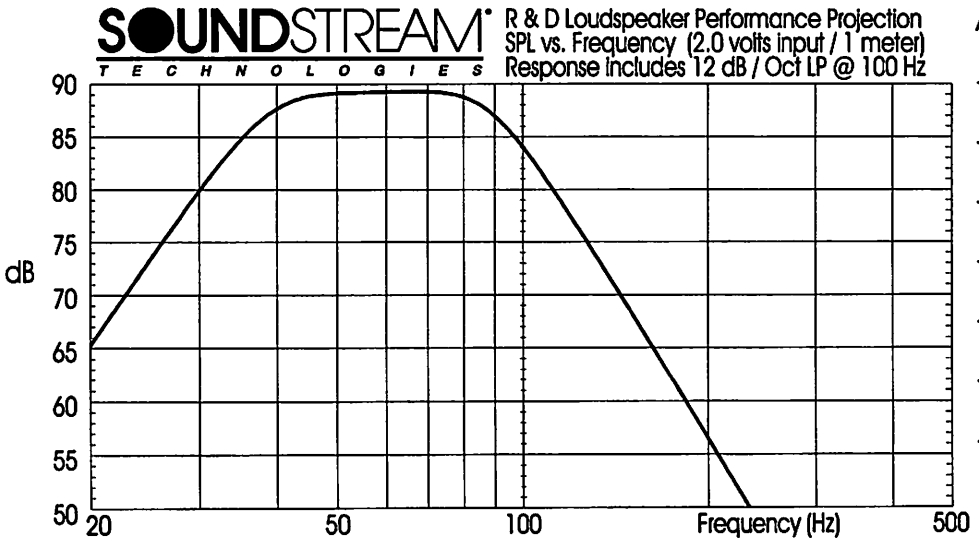

Application Notes:

-
-
-
-
-
-
-

CODE: S8EN2

SOUNDSTREAM®
TECHNOLOGIES

Woofer: Reference SS-8
Enclosure Type: Sealed
Music Type: Excellent for mid-bass

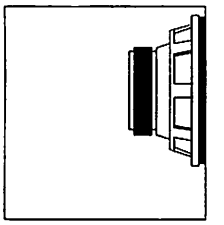

0.83 cu. ft. o.d.

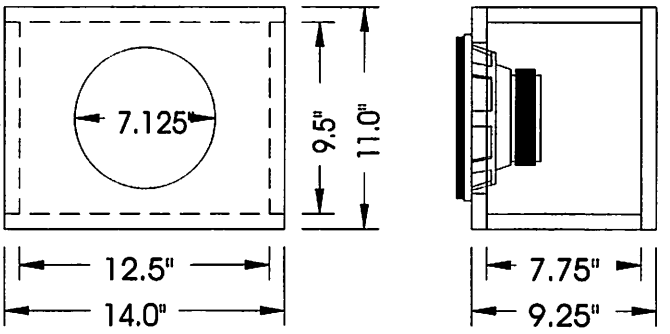

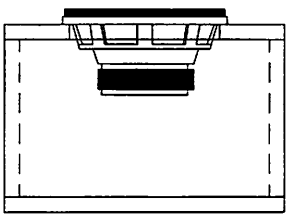

0.5 cu. ft. net = 864.0 cu. in.
woofer + 50.0 cu. in.
0.53 cu. ft. gross = 914.0 cu. in.

NOTE: Enclosure must be stuffed with fiberglass or other acoustic insulation!

SOUNDSTREAM® TECHNOLOGIES
R & D Loudspeaker Performance Projection
SPL vs. Frequency (2.0 volts input / 1 meter)
Response includes 12 dB / Oct LP @ 100 Hz

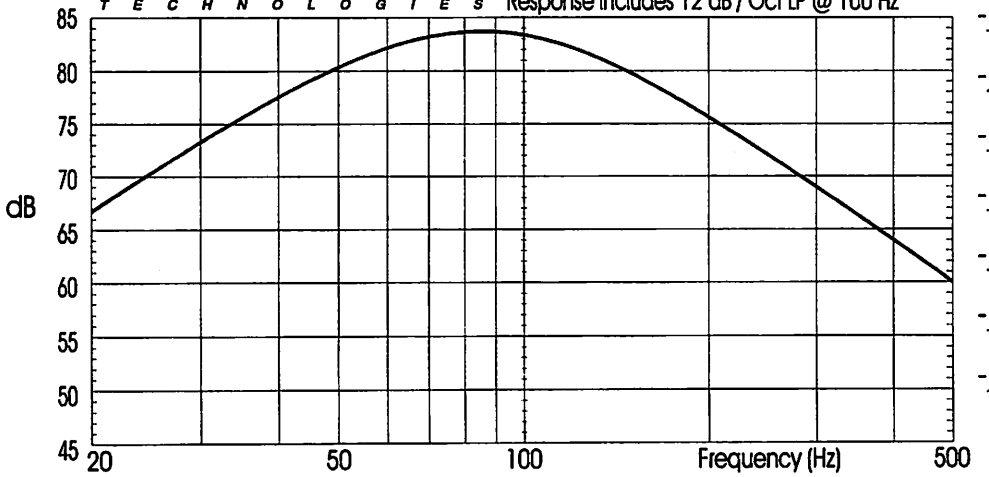

Application Notes:

CODE: S8EN3

SOUNDSTREAM®

TECHNOLOGIES

Woofer: Reference SS-8
Enclosure Type: Sealed
Music Type: Good subwoofer for classical and jazz

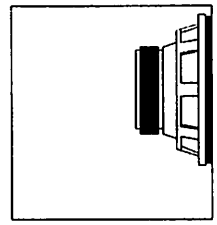

1.47 cu. ft. o.d.

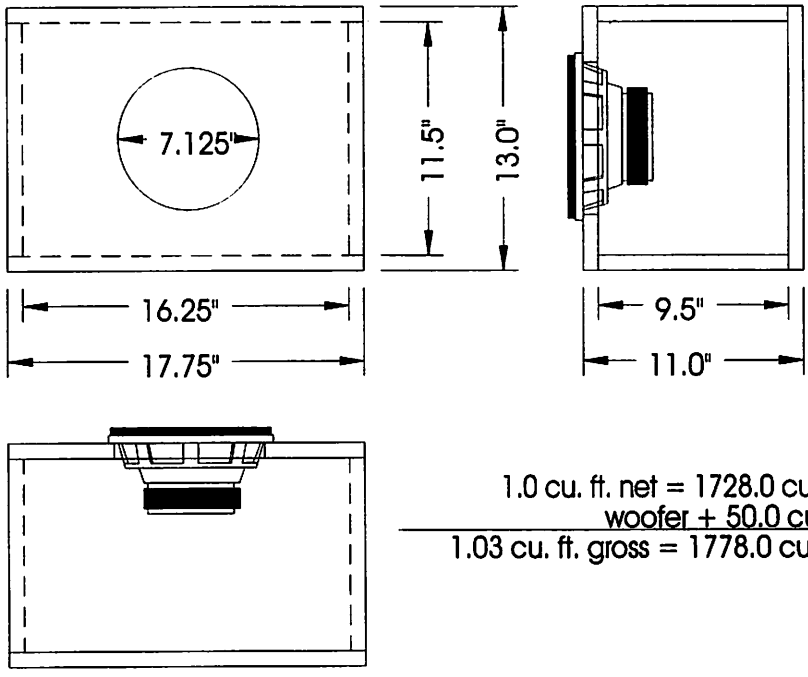

1.0 cu. ft. net = 1728.0 cu. in.
woofer + 50.0 cu. in.
1.03 cu. ft. gross = 1778.0 cu. in.

NOTE: Line all walls with 1" fiberglass insulation or similar material!

SOUNDSTREAM® TECHNOLOGIES

R & D Loudspeaker Performance Projection
SPL vs. Frequency (2.0 volts input / 1 meter)
Response includes 12 dB / Oct LP @ 100 Hz

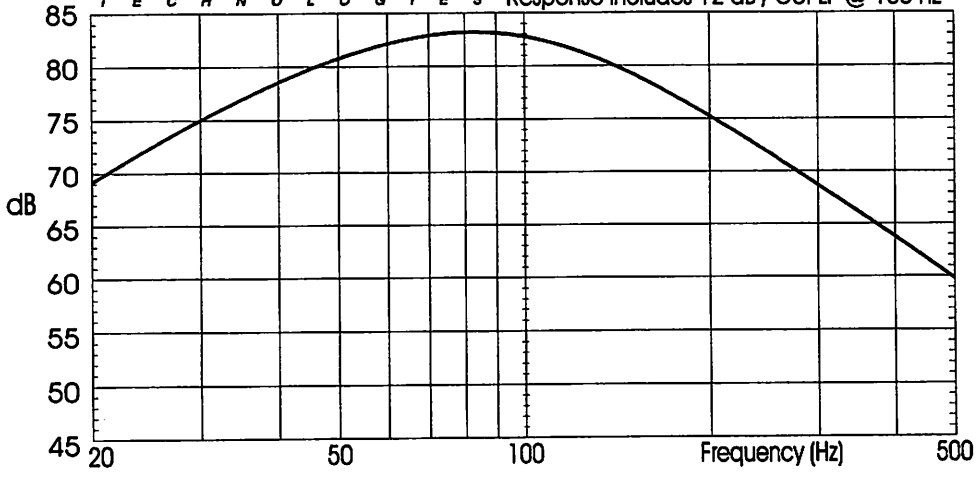

Application Notes:

- _____
- _____
- _____
- _____
- _____
- _____
- _____

CODE: S8EN4

SOUNDSTREAM®

TECHNOLOGIES

Woofer: Reference SS-8
Enclosure Type: Vented
Music Type: Very good for Rock or Rap

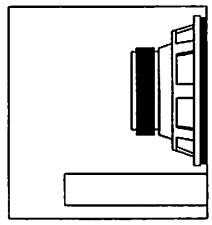

1.27 cu. ft. o.d.

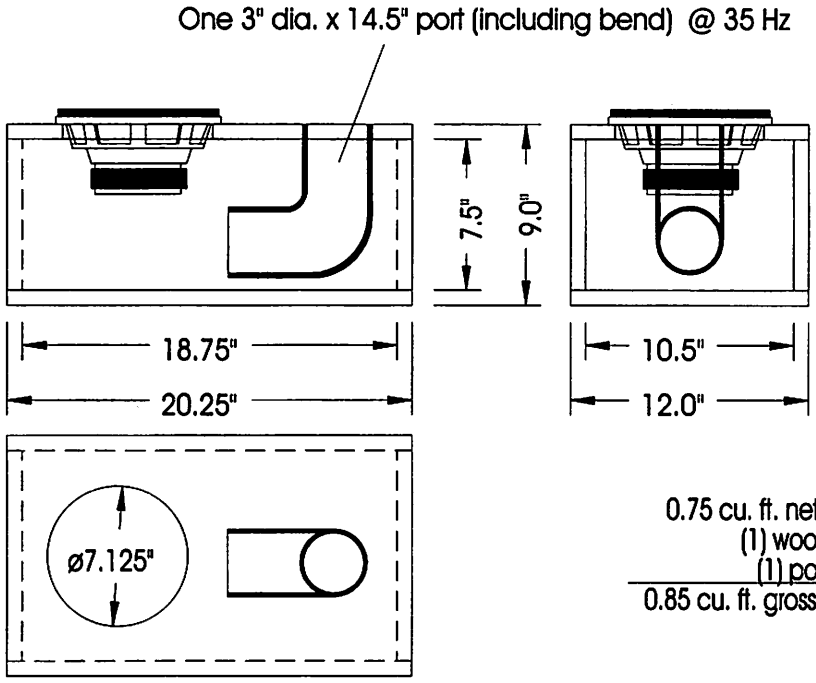

0.75 cu. ft. net = 1296.0 cu. in.
(1) woofer + 50.0 cu. in.
(1) port + 114.0 cu. in.
0.85 cu. ft. gross = 1460.0 cu. in.

NOTE: Line all walls with 1" fiberglass insulation or similar material!

SOUNDSTREAM® TECHNOLOGIES

R & D Loudspeaker Performance Projection
SPL vs. Frequency (2.0 volts input / 1 meter)
Response includes 12 dB / Oct LP @ 100 Hz

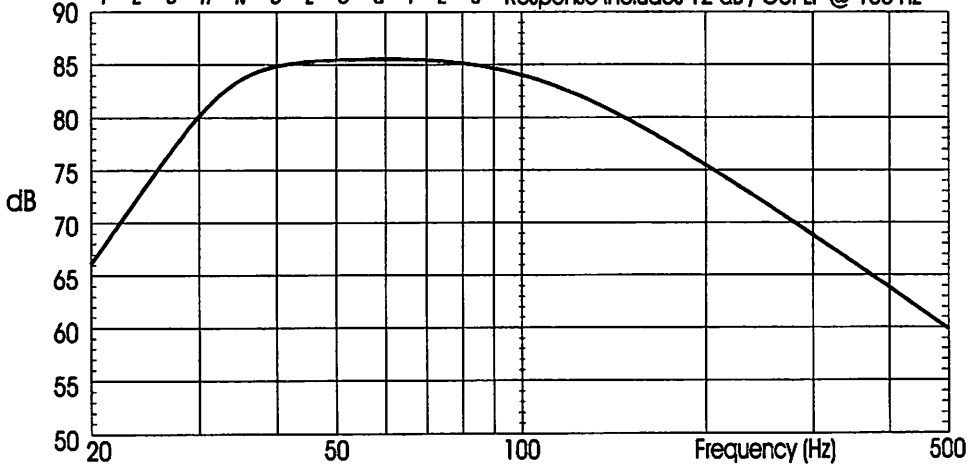

Application Notes:

CODE: S8EN5

SOUNDSTREAM®
TECHNOLOGIES

Woofer: Reference SS-8
Enclosure Type: Vented
Music Type: Very good all around enclosure

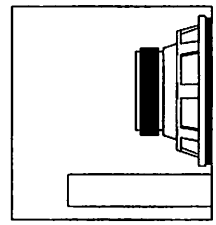
1.55 cu. ft. o.d.

One 3" dia. x 10.25" port (including bend) @ 35 Hz

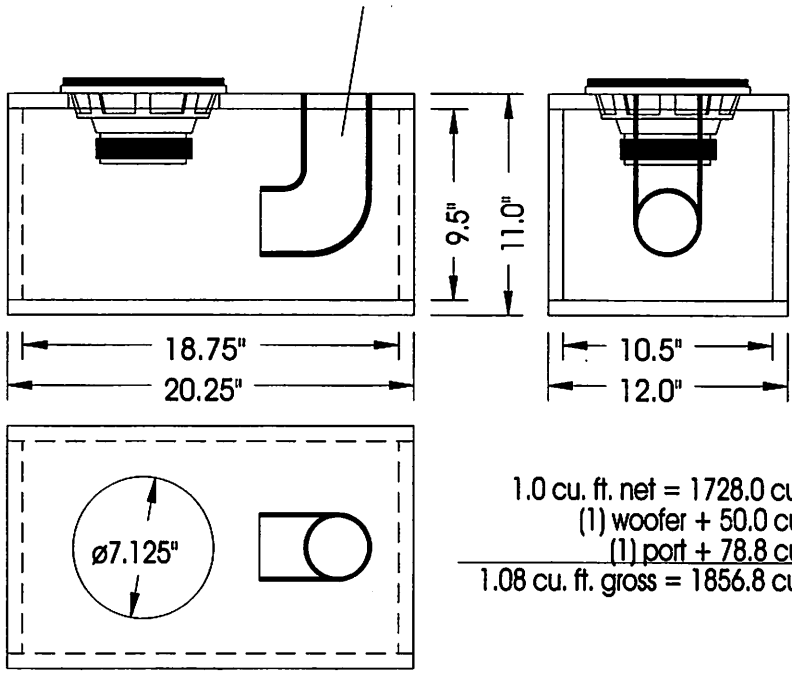

1.0 cu. ft. net = 1728.0 cu. in.
(1) woofer + 50.0 cu. in.
(1) port + 78.8 cu. in.
1.08 cu. ft. gross = 1856.8 cu. in.

NOTE: Line all walls with 1" fiberglass insulation or similar material!

SOUNDSTREAM® TECHNOLOGIES
R & D Loudspeaker Performance Projection
SPL vs. Frequency (2.0 volts input / 1 meter)
Response includes 12 dB / Oct LP @ 100 Hz

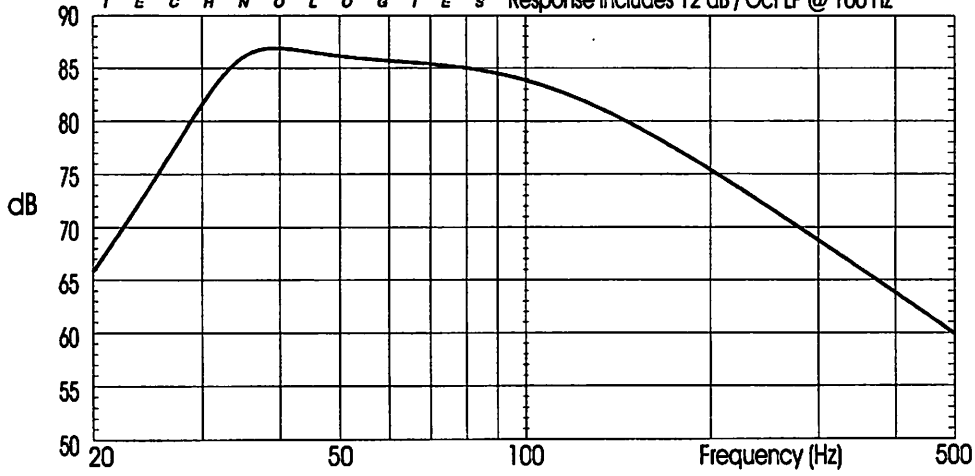

Application Notes:

CODE: S8EN6

SOUNDSTREAM®
TECHNOLOGIES

Woofer: Reference SS-8
Enclosure Type: Sealed Bandpass #21
Music Type: Good output, good all around enclosure

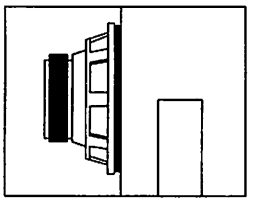
1.65 cu. ft. o.d.

Suggestion: Vent the port through the rear deck of the vehicle.

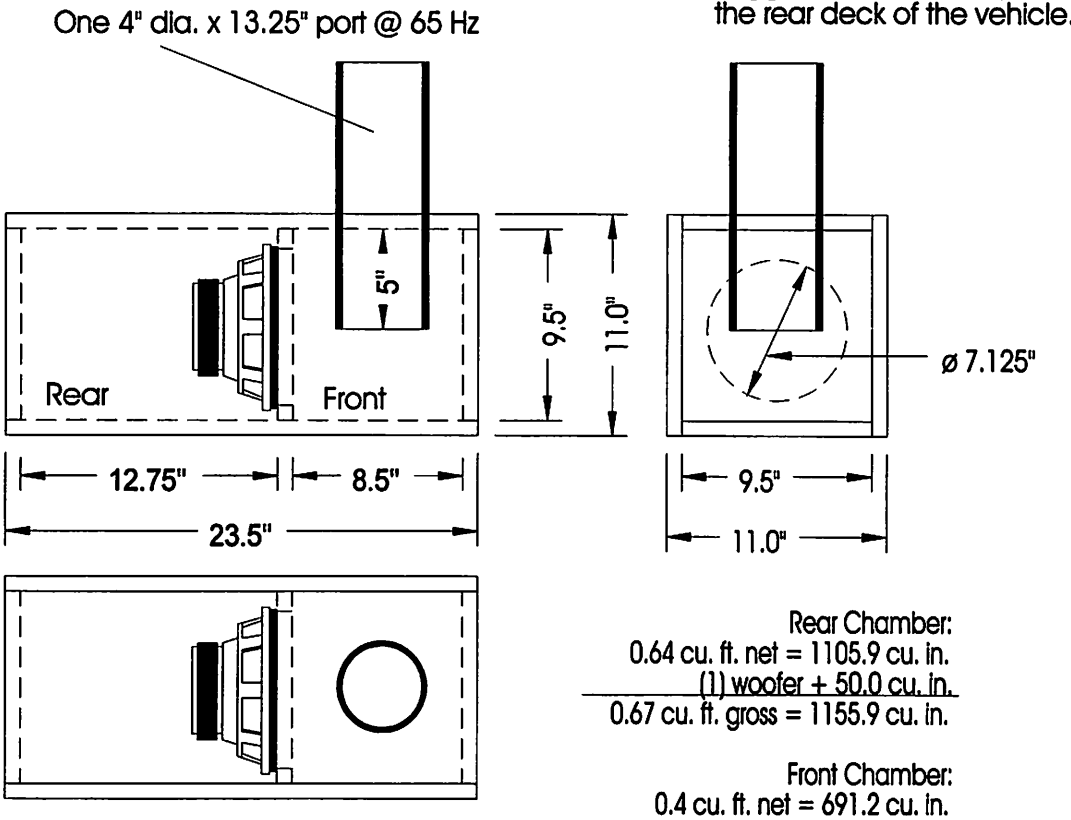

Rear Chamber:
0.64 cu. ft. net = 1105.9 cu. in.
(1) woofer + 50.0 cu. in.
0.67 cu. ft. gross = 1155.9 cu. in.

Front Chamber:
0.4 cu. ft. net = 691.2 cu. in.
(length in box) port + 79.5 cu. in.
0.45 cu. ft. gross = 770.7 cu. in.

NOTE: Line all walls with 1" fiberglass insulation or similar material!

SOUNDSTREAM® TECHNOLOGIES
R & D Loudspeaker Performance Projection
SPL vs. Frequency (2.0 volts input / 1 meter)
Response includes 12 dB / Oct LP @ 100 Hz

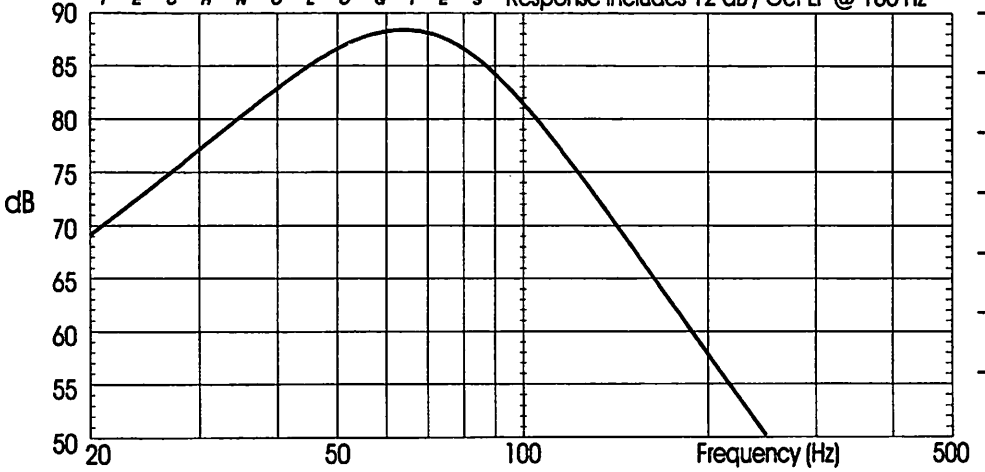

Application Notes:

CODE: S8EN7

SOUNDSTREAM®

TECHNOLOGIES

Woofer: Reference SS-8
Enclosure Type: Sealed Bandpass #23 (Isobaric configuration)
Music Type: High SPL; Rock or Rap

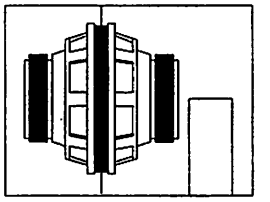

1.30 cu. ft. o.d.

One 4" dia. x 13.25" port @ 65 Hz

Suggestion: Vent the port through the rear deck of the vehicle.

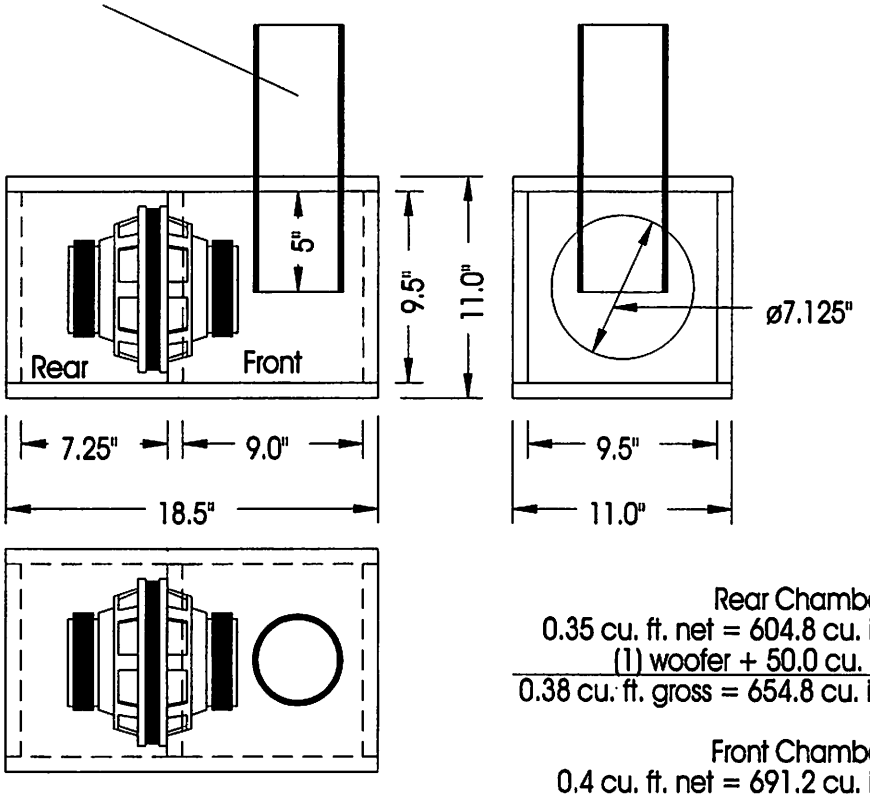

Rear Chamber:
0.35 cu. ft. net = 604.8 cu. in.
(1) woofer + 50.0 cu. in.
0.38 cu. ft. gross = 654.8 cu. in.

Front Chamber:
0.4 cu. ft. net = 691.2 cu. in.
(1) woofer + 50.0 cu. in.
(length in box) port + 79.5 cu. in.
0.47 cu. ft gross = 820.7 cu. in.

NOTE: Line all walls with 1" fiberglass insulation or similar material!

SOUNDSTREAM® TECHNOLOGIES

R & D Loudspeaker Performance Projection
SPL vs. Frequency (2.0 volts input / 1 meter)
Response includes 12 dB / Oct LP @ 100 Hz

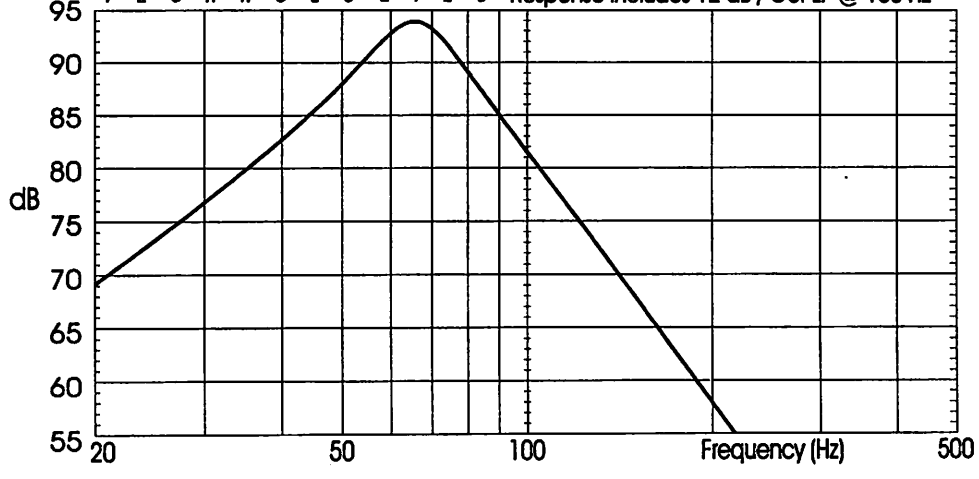

Application Notes:

-
-
-
-
-
-
-

CODE: S8EN8

SOUNDSTREAM®
TECHNOLOGIES

Woofer: Reference SS-8
Enclosure Type: Sealed Bandpass (2 woofer / 3 chamber)
Music Type: Good output, good all around enclosure

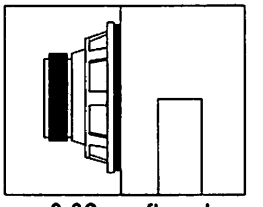
3.32 cu. ft. o.d.

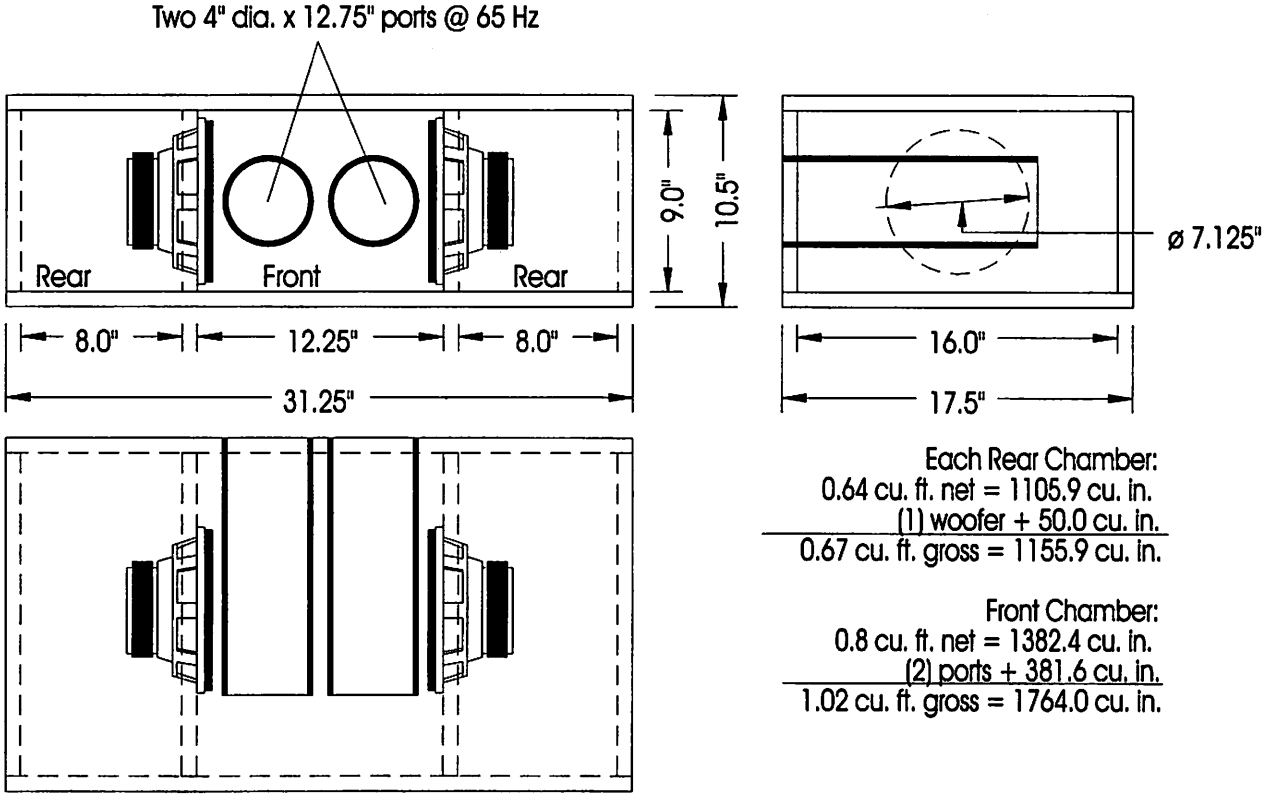

Each Rear Chamber:
0.64 cu. ft. net = 1105.9 cu. in.
(1) woofer + 50.0 cu. in.
0.67 cu. ft. gross = 1155.9 cu. in.

Front Chamber:
0.8 cu. ft. net = 1382.4 cu. in.
(2) ports + 381.6 cu. in.
1.02 cu. ft. gross = 1764.0 cu. in.

NOTE: Line all walls with 1" fiberglass insulation or similar material!

SOUNDSTREAM® TECHNOLOGIES
R & D Loudspeaker Performance Projection
SPL vs. Frequency (2.0 volts input / 1 meter)
Response includes 12 dB / Oct LP @ 100 Hz

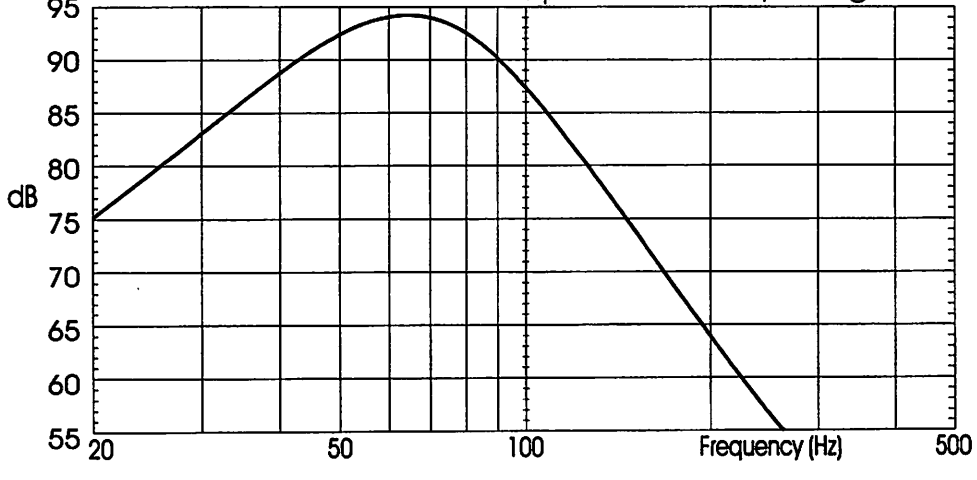

Application Notes:

CODE: S8EN9

SOUNDSTREAM®
TECHNOLOGIES

Woofer: Reference SS-8
Enclosure Type: Vented Bandpass #19 (Isobaric configuration)
Music Type: Rock or Rap

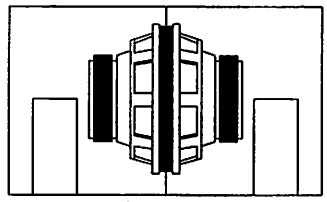
1.20 cu. ft. o.d.

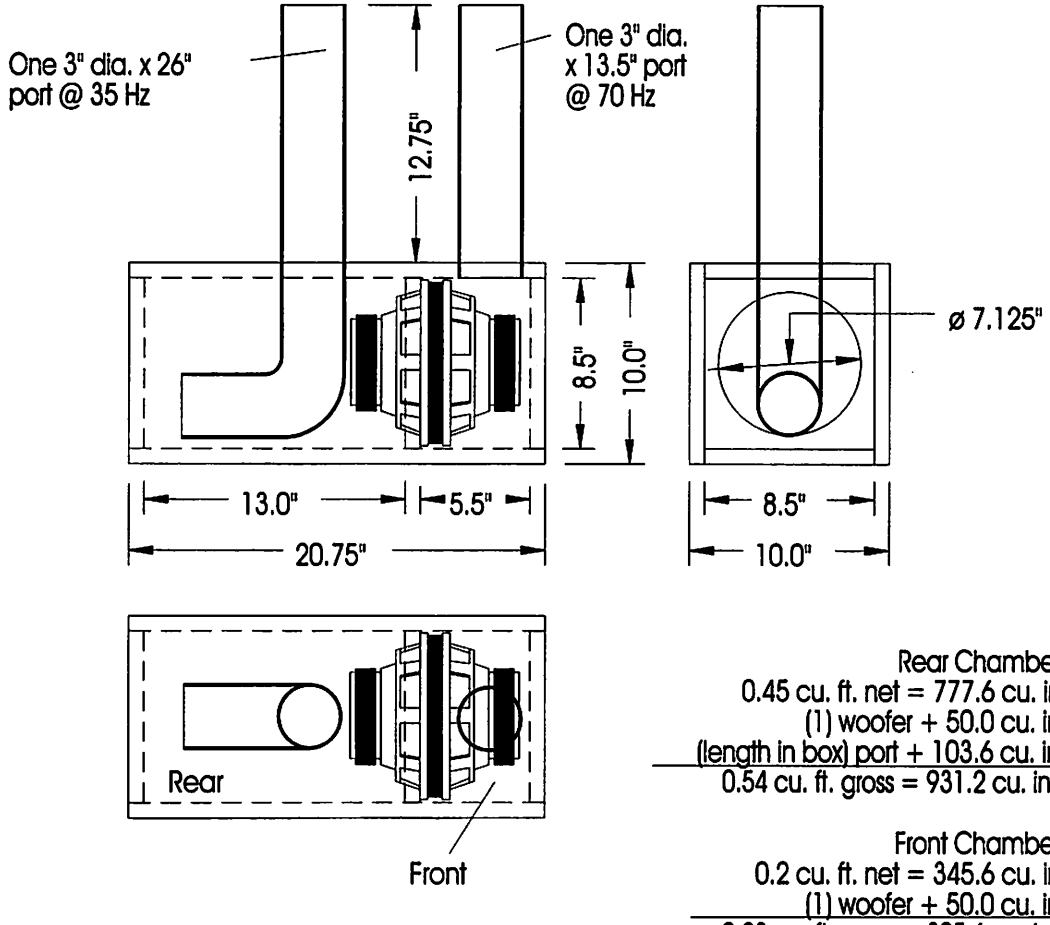

Rear Chamber:
0.45 cu. ft. net = 777.6 cu. in.
(1) woofer + 50.0 cu. in.
(length in box) port + 103.6 cu. in.
0.54 cu. ft. gross = 931.2 cu. in.

Front Chamber:
0.2 cu. ft. net = 345.6 cu. in.
(1) woofer + 50.0 cu. in.
0.23 cu. ft. gross = 395.6 cu. in.

NOTE: Line all walls with fiberglass insulation or similar material!

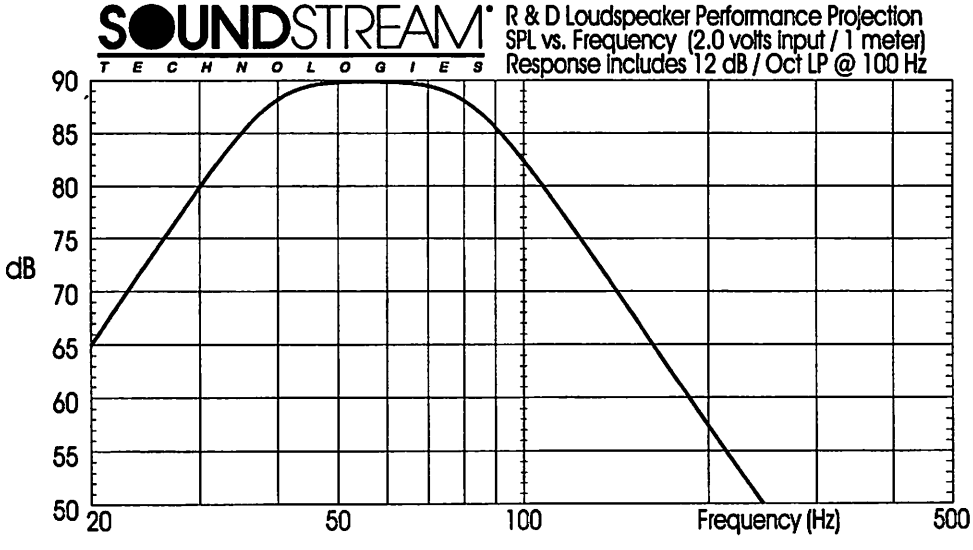

Application Notes:

CODE: S8EN10

SOUNDSTREAM®

TECHNOLOGIES

Woofer: Reference SS-8
Enclosure Type: Sealed Bandpass
Music Type: Good small enclosure; medium output

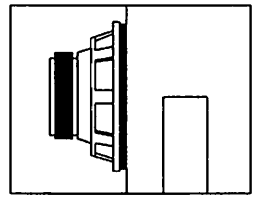

1.09 cu. ft. o.d.

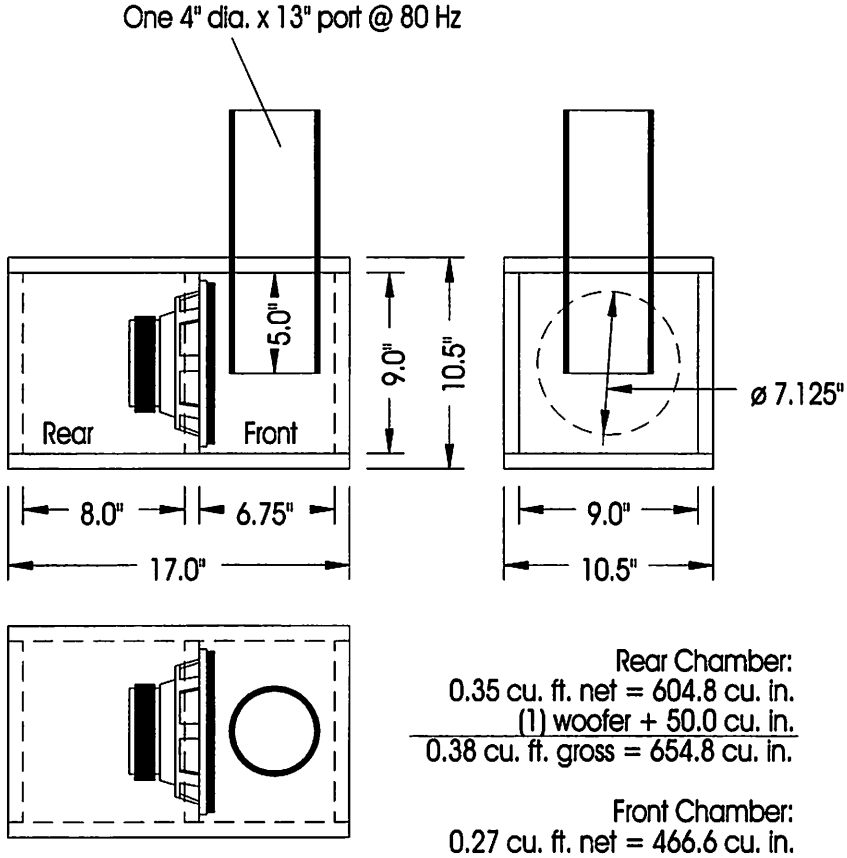

Rear Chamber:
0.35 cu. ft. net = 604.8 cu. in.
(1) woofer + 50.0 cu. in.
0.38 cu. ft. gross = 654.8 cu. in.

Front Chamber:
0.27 cu. ft. net = 466.6 cu. in.
(length in box) port + 79.5 cu. in.
0.32 cu. ft. gross = 546.1 cu. in.

NOTE: Line all walls with 1" fiberglass insulation or similar material!

SOUNDSTREAM® TECHNOLOGIES

R & D Loudspeaker Performance Projection
SPL vs. Frequency (2.0 volts input / 1 meter)
Response includes 12 dB / Oct LP @ 100 Hz

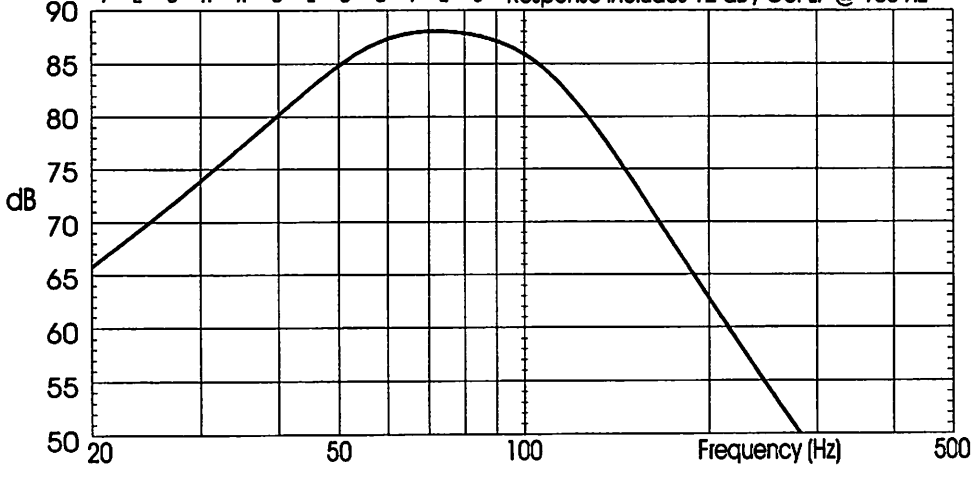

Application Notes:

CODE: S8EN11

SOUNDSTREAM®
TECHNOLOGIES

Woofer: Reference SS-8
Enclosure Type: Vented Bandpass
Music Type: High SPL; Rock or Rap

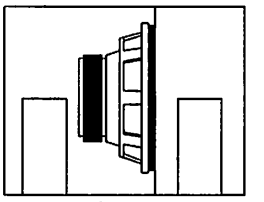
1.72 cu. ft. o.d.

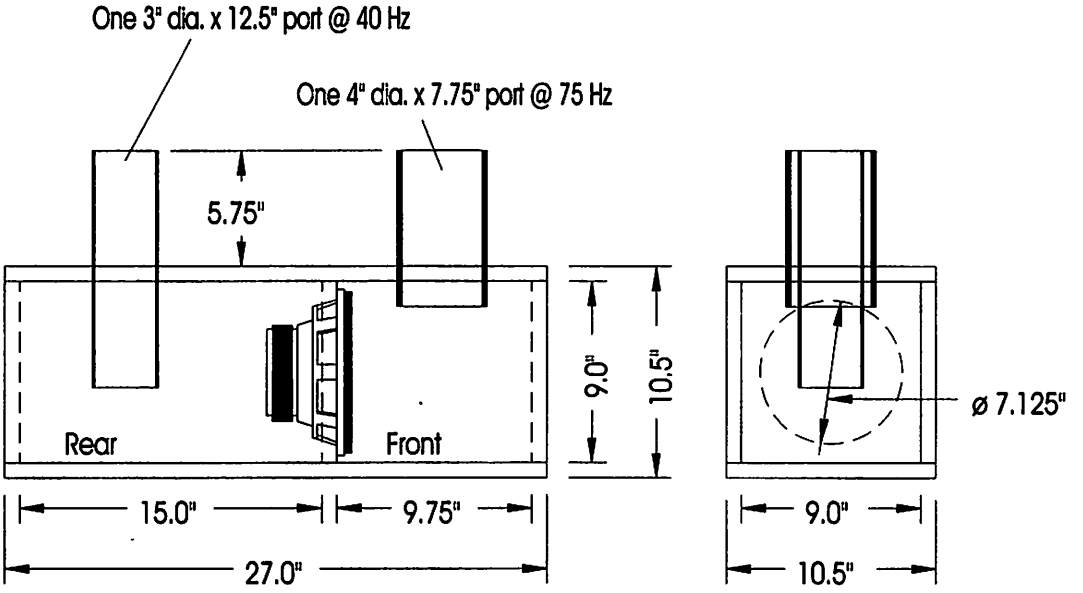

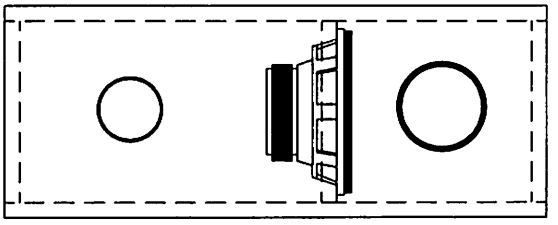

Rear Chamber:
0.65 cu. ft. net = 1123.2 cu. in.
(1) woofer + 50.0 cu. in.
(length in box) port + 49.7 cu. in.
0.71 cu. ft. gross = 1222.9 cu. in.

Front Chamber:
0.45 cu. ft. net = 777.6 cu. in.
(length in box) + 19.9 cu. in.
0.46 cu. ft. gross = 797.5 cu. in.

NOTE: Line all walls with 1" fiberglass insulation or similar material!

SOUNDSTREAM® TECHNOLOGIES
R & D Loudspeaker Performance Projection
SPL vs. Frequency (2.0 volts input / 1 meter)
Response includes 12 dB / Oct LP @ 100 Hz

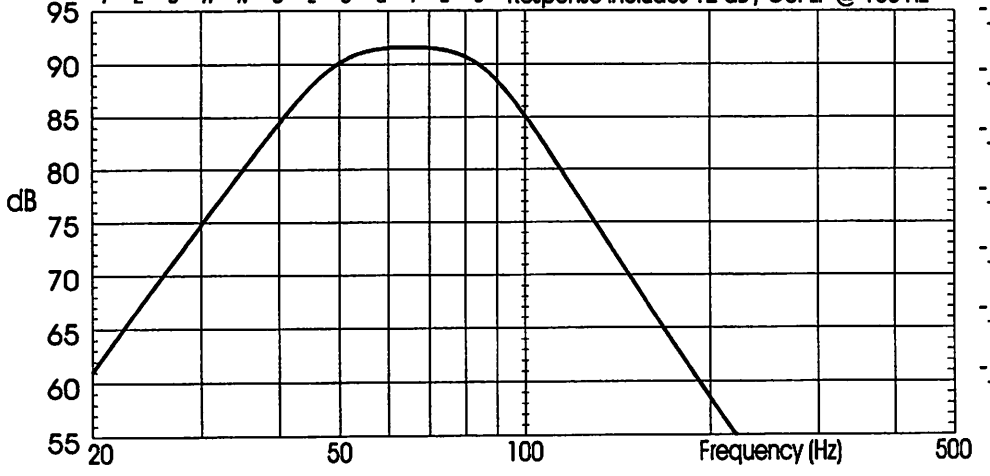

Application Notes:

CODE: S8EN12

SOUNDSTREAM®

TECHNOLOGIES

Woofer: Reference SS-10R
Enclosure Type: Vented (2 woofer version)
Music Type: Good all around enclosure

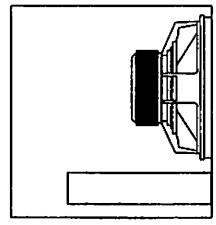

3.85 cu. ft. o.d.

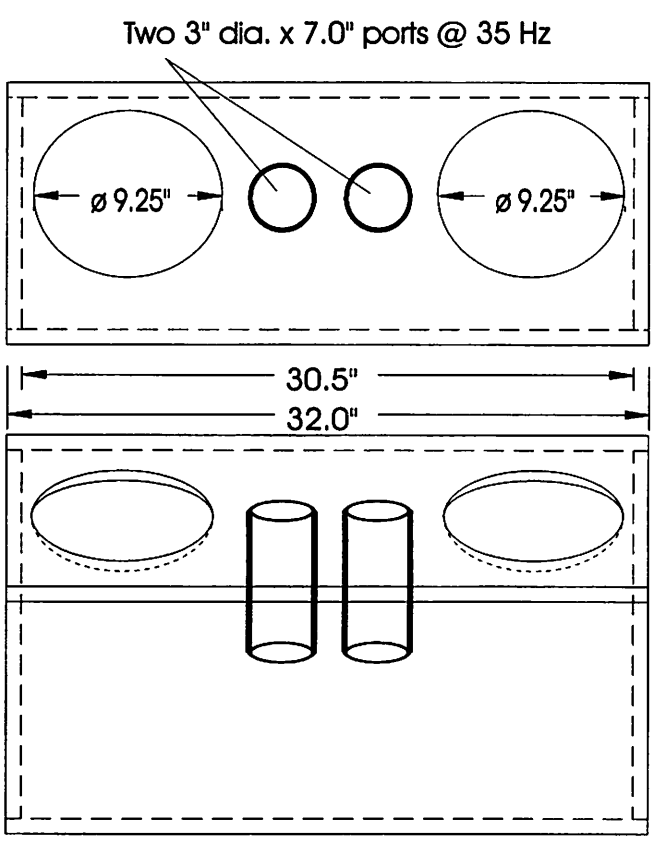

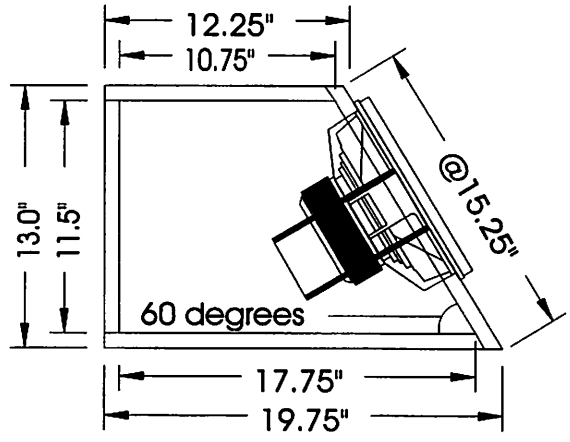

VOLUME:

2.60 cu. ft. net = 4492.8 cu. in.
(2) woofers + 360.0 cu. in.
(2) ports + 103.6 cu. in.
2.87 cu. ft. gross = 4956.4 cu. in.

NOTE: Line all walls with 1" fiberglass insulation or similar material!

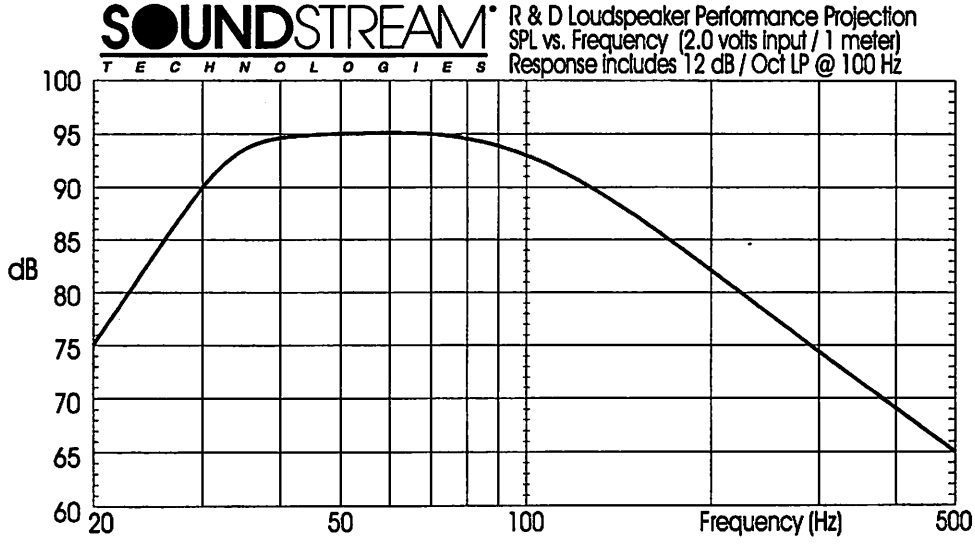

Application Notes:

-
-
-
-
-
-
-

CODE: S10REN1

SOUNDSTREAM®
TECHNOLOGIES

Woofer: Reference SS-10R
Enclosure Type: Sealed Bandpass (2 woofer / 3 chamber version)
Music Type: High SPL; Rock or Rap

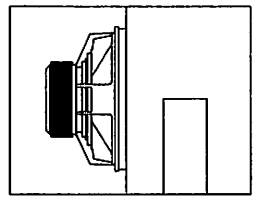

4.33 cu. ft. o.d.

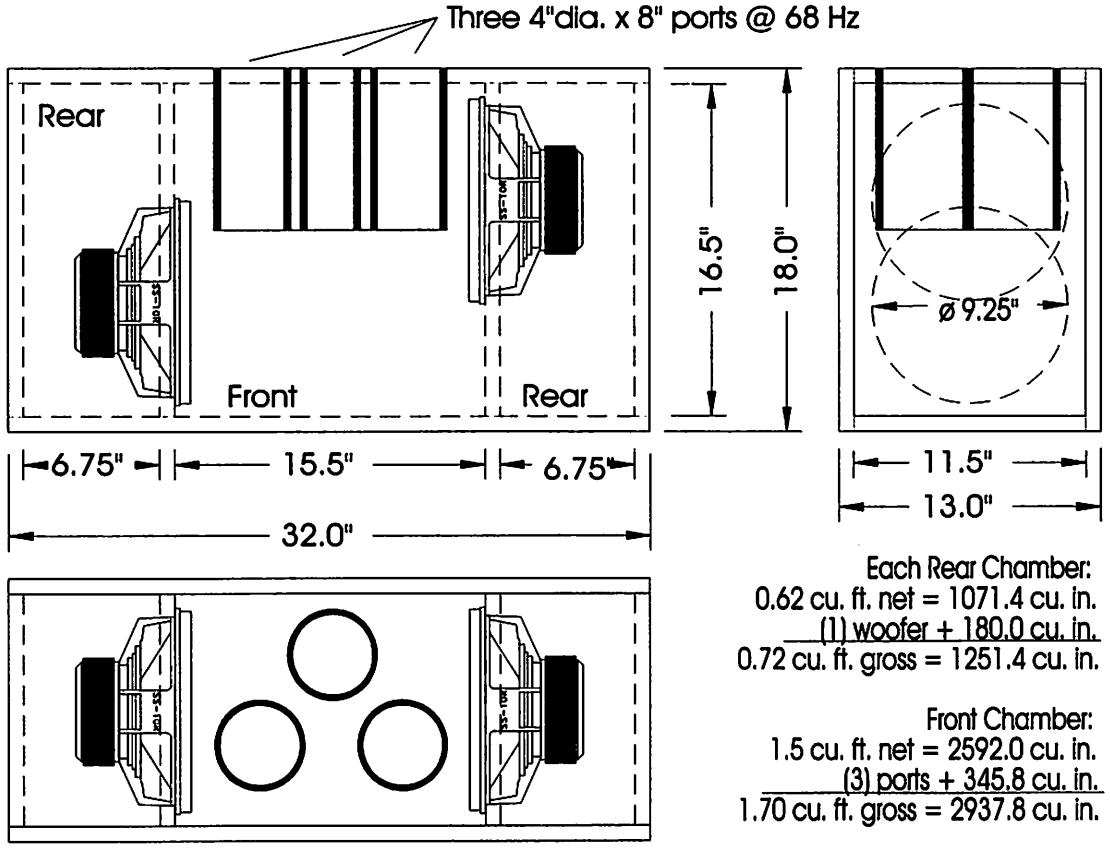

Each Rear Chamber:
0.62 cu. ft. net = 1071.4 cu. in.
(1) woofer + 180.0 cu. in.
0.72 cu. ft. gross = 1251.4 cu. in.

Front Chamber:
1.5 cu. ft. net = 2592.0 cu. in.
(3) ports + 345.8 cu. in.
1.70 cu. ft. gross = 2937.8 cu. in.

NOTE: Line all walls with 1" fiberglass insulation or similar material!

SOUNDSTREAM® TECHNOLOGIES
R & D Loudspeaker Performance Projection
SPL vs. Frequency (2.0 volts input / 1 meter)
Response includes 12 dB / Oct LP @ 100 Hz

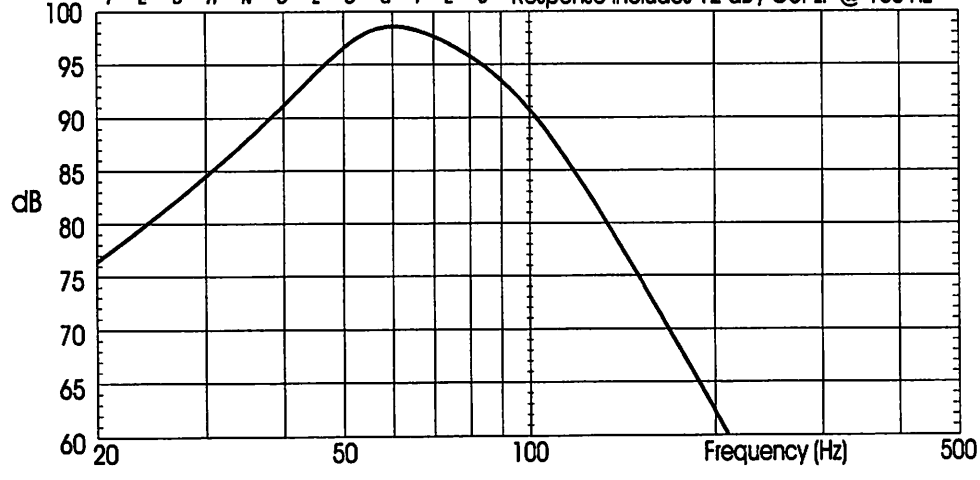

Application Notes:

- _____
- _____
- _____
- _____
- _____
- _____
- _____

CODE: S10REN2

SOUNDSTREAM®
TECHNOLOGIES

Woofer: Reference SS-10R
Enclosure Type: Vented Bandpass #34
Music Type: High SPL; Rock or Rap

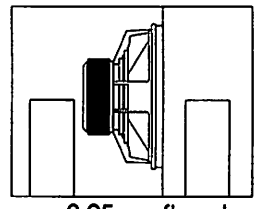
2.95 cu. ft. o.d.

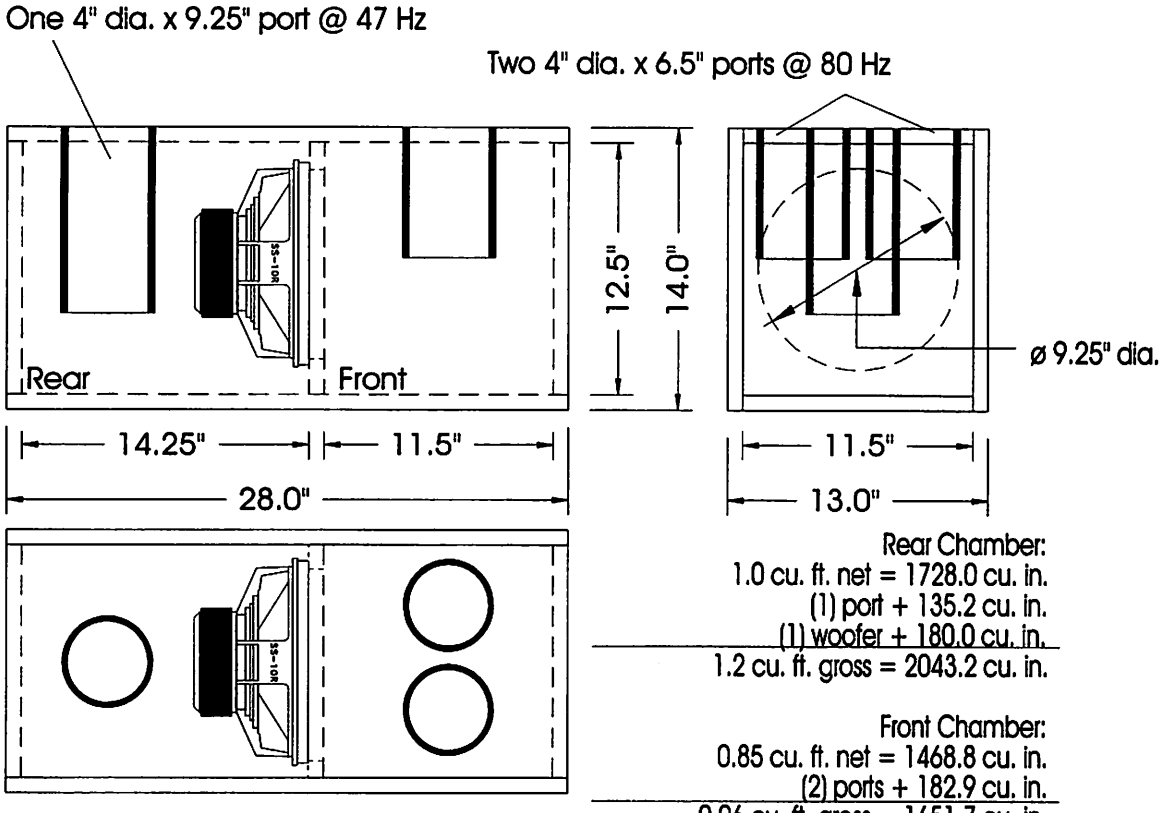

Rear Chamber:
1.0 cu. ft. net = 1728.0 cu. in.
(1) port + 135.2 cu. in.
(1) woofer + 180.0 cu. in.
1.2 cu. ft. gross = 2043.2 cu. in.

Front Chamber:
0.85 cu. ft. net = 1468.8 cu. in.
(2) ports + 182.9 cu. in.
0.96 cu. ft. gross = 1651.7 cu. in.

NOTE: Line all walls with 1" fiberglass insulation or similar material!

SOUNDSTREAM® TECHNOLOGIES
R & D Loudspeaker Performance Projection
SPL vs. Frequency (2.0 volts input / 1 meter)
Response includes 12 dB / Oct LP @ 100 Hz

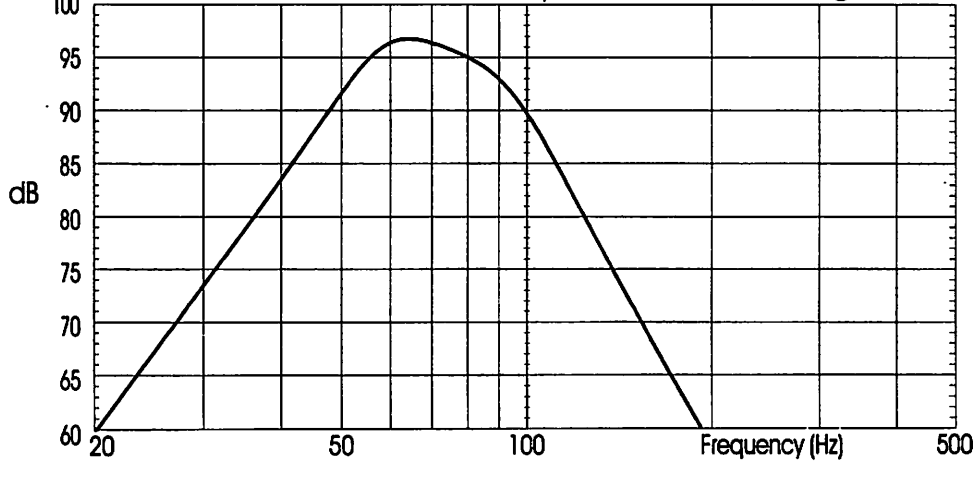

Application Notes:

-
-
-
-
-
-
-

CODE: S10REN3

SOUNDSTREAM®

TECHNOLOGIES

Woofer: Reference SS-10R
Enclosure Type: Vented Bandpass #35
Music Type: High SPL; Rock or Rap

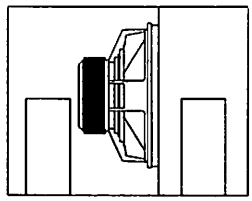

3.07 cu. ft. o.d.

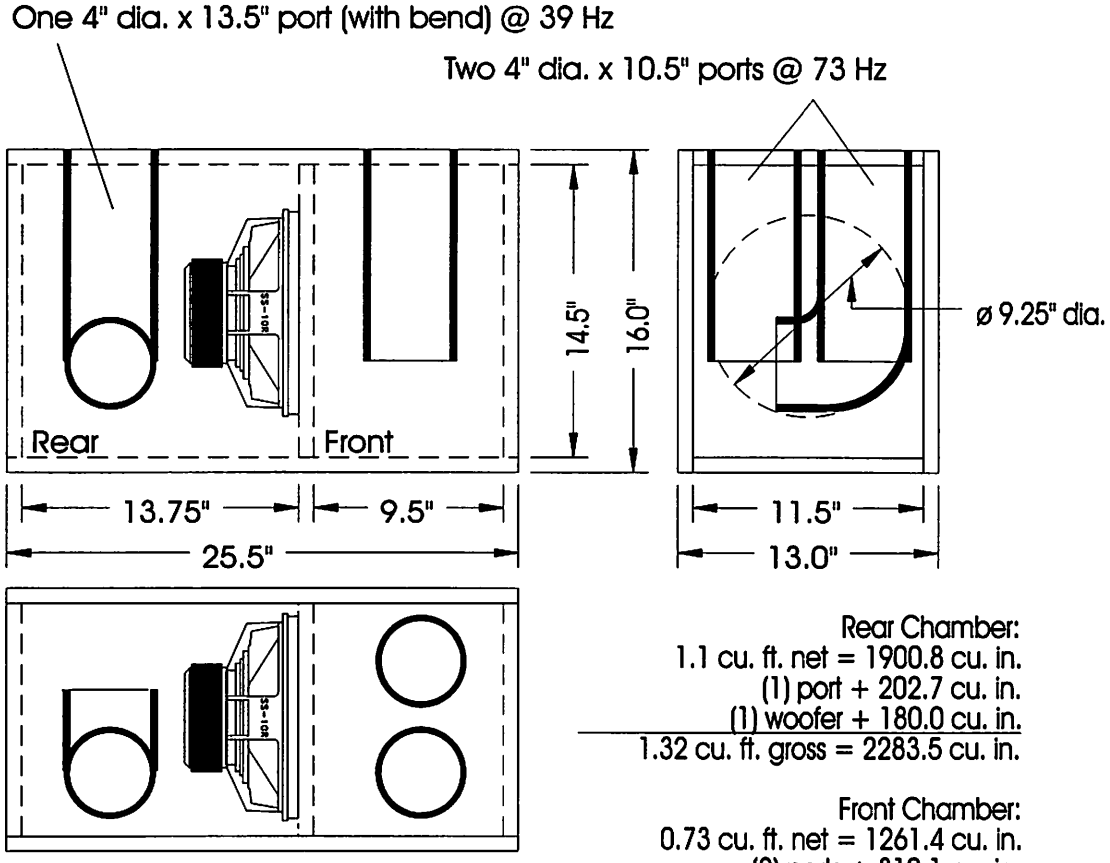

Rear Chamber:
1.1 cu. ft. net = 1900.8 cu. in.
(1) port + 202.7 cu. in.
(1) woofer + 180.0 cu. in.
1.32 cu. ft. gross = 2283.5 cu. in.

Front Chamber:
0.73 cu. ft. net = 1261.4 cu. in.
(2) ports + 310.1 cu. in.
0.91 cu. ft. gross = 1571.5 cu. in.

NOTE: Line all walls with 1" fiberglass insulation or similar material!

SOUNDSTREAM® TECHNOLOGIES

R & D Loudspeaker Performance Projection
SPL vs. Frequency (2.0 volts input / 1 meter)
Response includes 12 dB / Oct LP @ 100 Hz

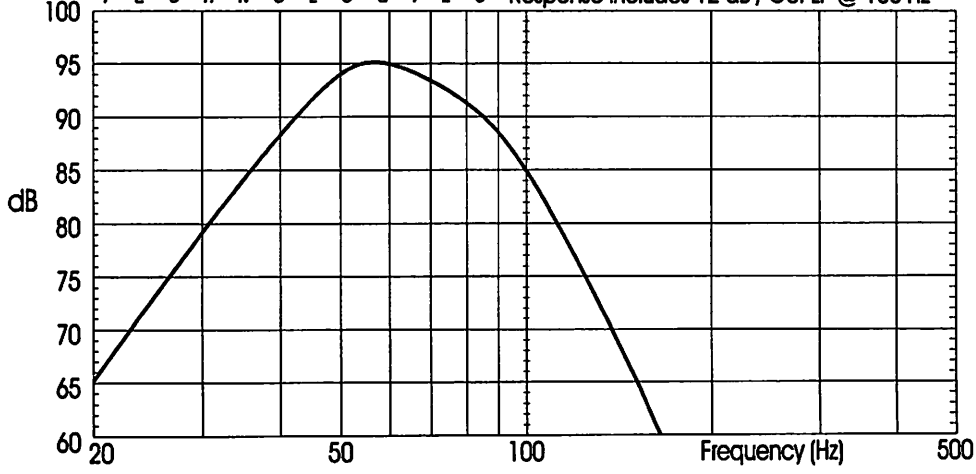

Application Notes:

- _____
- _____
- _____
- _____
- _____
- _____
- _____

CODE: S10REN4

SOUNDSTREAM®
TECHNOLOGIES

Woofer: Reference SS-10R
Enclosure Type: Vented Bandpass #36
Music Type: Good all around enclosure

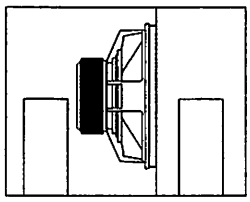
3.00 cu. ft. o.d.

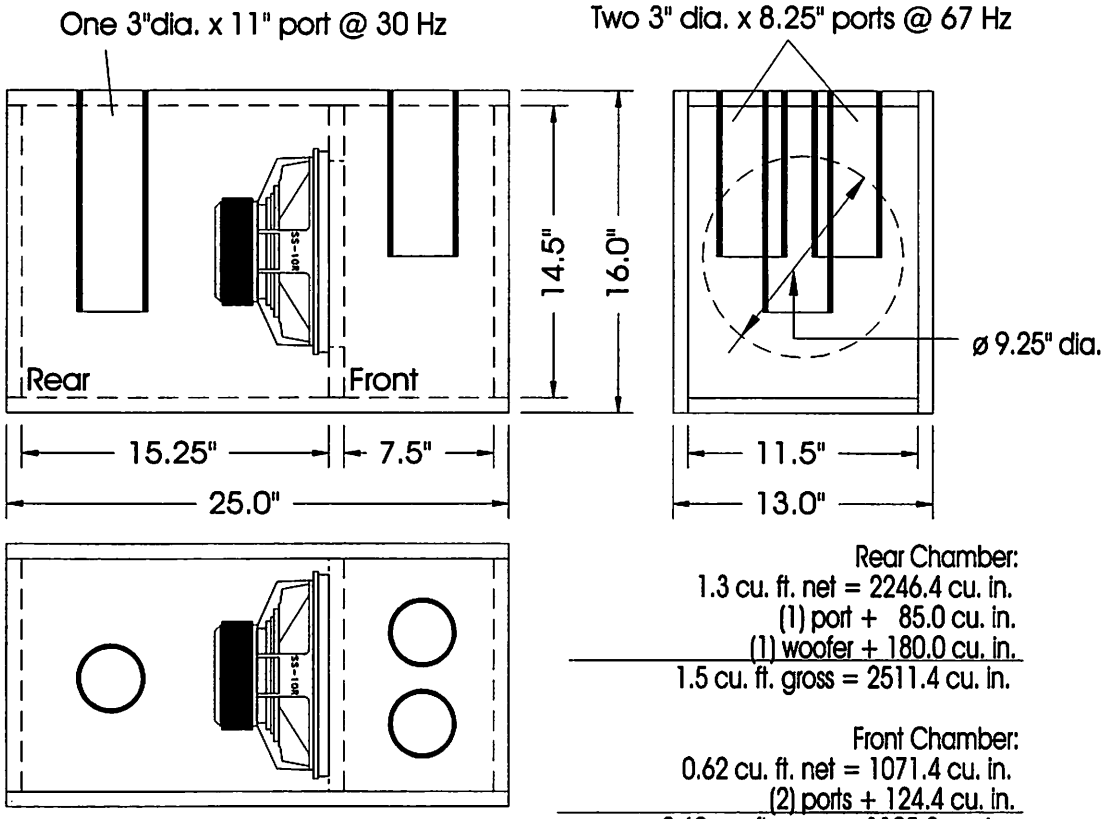

Rear Chamber:
1.3 cu. ft. net = 2246.4 cu. in.
(1) port + 85.0 cu. in.
(1) woofer + 180.0 cu. in.
1.5 cu. ft. gross = 2511.4 cu. in.

Front Chamber:
0.62 cu. ft. net = 1071.4 cu. in.
(2) ports + 124.4 cu. in.
0.69 cu. ft. gross = 1195.8 cu. in.

NOTE: Line all walls with 1" fiberglass insulation or similar material!

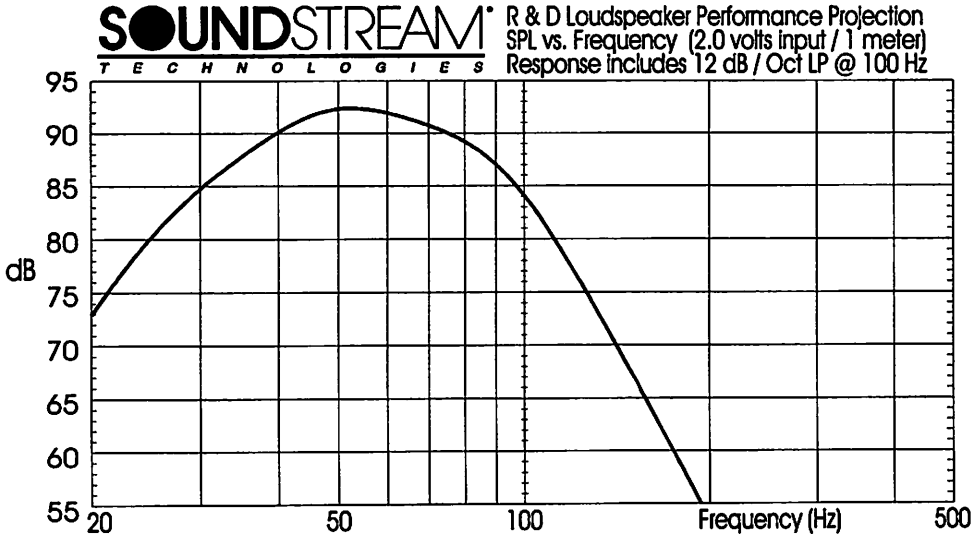

Application Notes:

CODE: S10REN5

SOUNDSTREAM®
TECHNOLOGIES

Woofer: Reference SS-10R
Enclosure Type: Sealed Bandpass #31
Music Type: High SPL; Rock or Rap

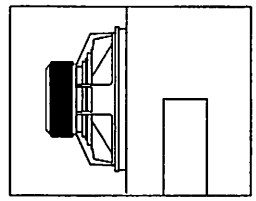

3.19 cu. ft. o.d.

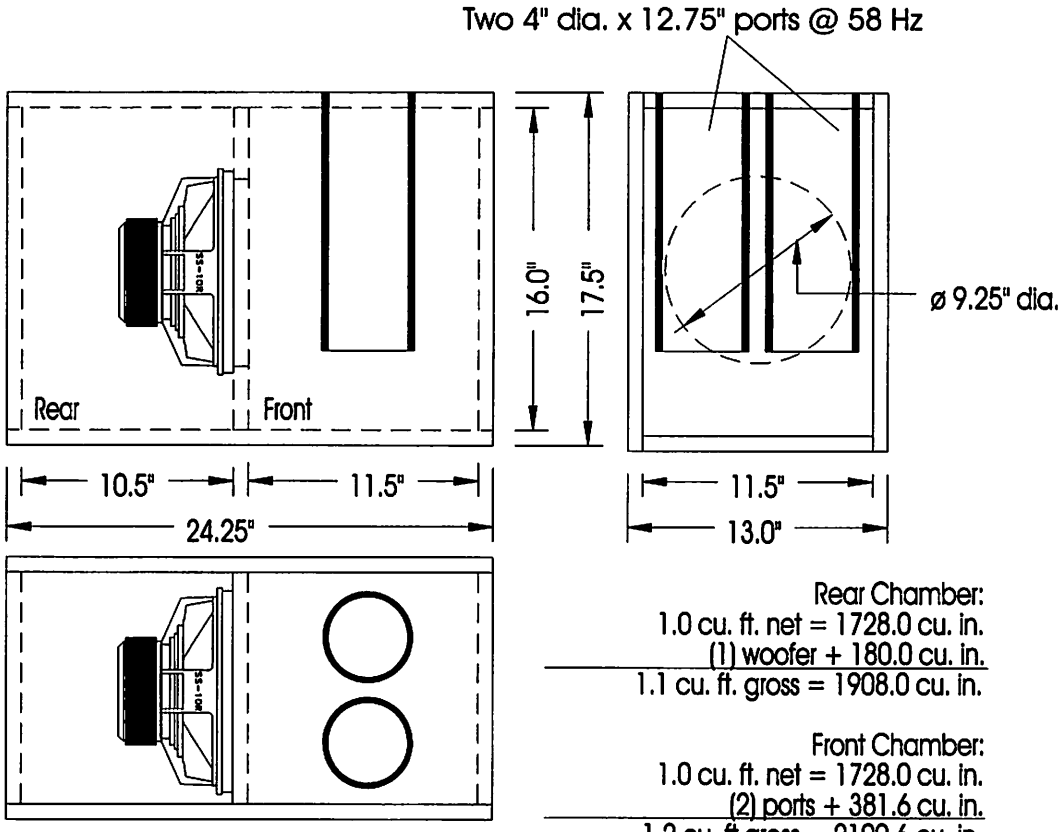

Rear Chamber:
1.0 cu. ft. net = 1728.0 cu. in.
(1) woofer + 180.0 cu. in.
1.1 cu. ft. gross = 1908.0 cu. in.

Front Chamber:
1.0 cu. ft. net = 1728.0 cu. in.
(2) ports + 381.6 cu. in.
1.2 cu. ft.gross = 2109.6 cu. in.

NOTE: Line all walls with 1" fiberglass insulation or similar material!

SOUNDSTREAM® TECHNOLOGIES
R & D Loudspeaker Performance Projection
SPL vs. Frequency (2.0 volts input / 1 meter)
Response includes 12 dB / Oct LP @ 100 Hz

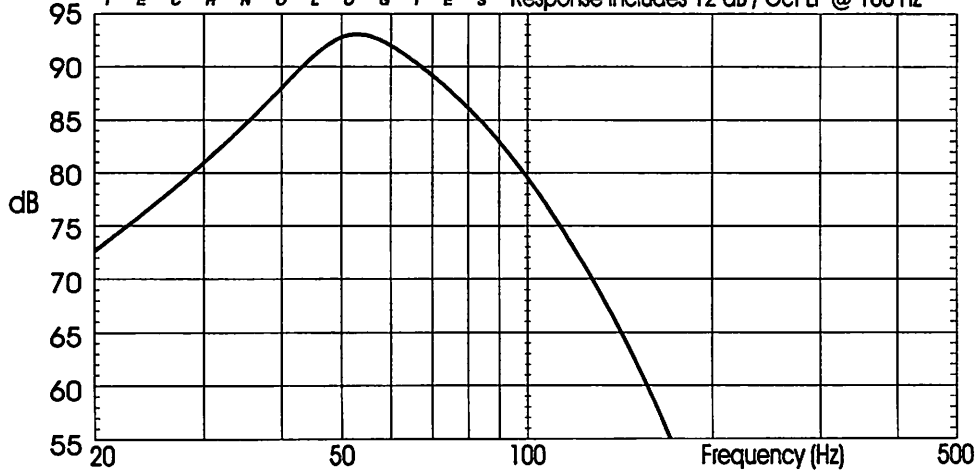

Application Notes:

-
-
-
-
-
-
-

CODE: S10REN6

SOUNDSTREAM®

TECHNOLOGIES

Woofer: Reference SS-10R
Enclosure Type: Sealed Bandpass #32
Music Type: High SPL; Rock or Rap

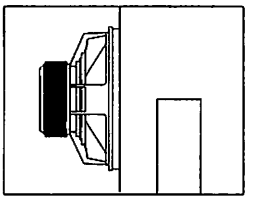

3.00 cu. ft. o.d.

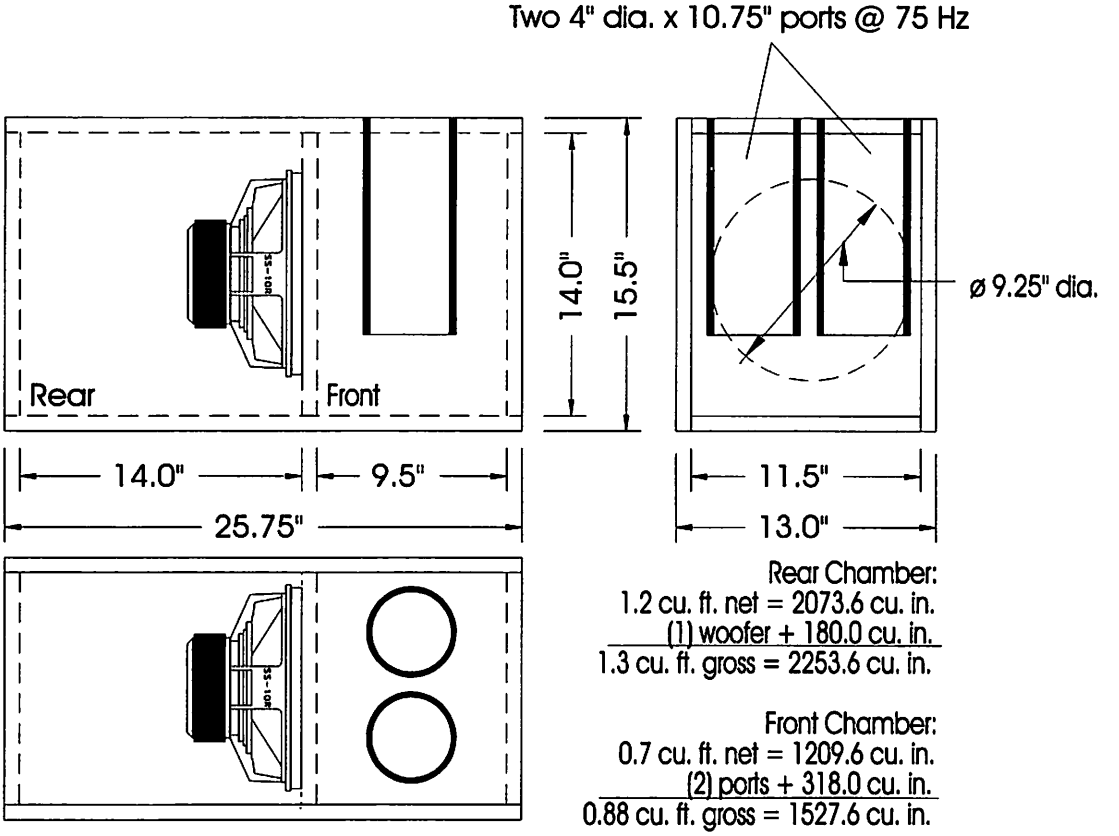

Rear Chamber:
1.2 cu. ft. net = 2073.6 cu. in.
(1) woofer + 180.0 cu. in.
1.3 cu. ft. gross = 2253.6 cu. in.

Front Chamber:
0.7 cu. ft. net = 1209.6 cu. in.
(2) ports + 318.0 cu. in.
0.88 cu. ft. gross = 1527.6 cu. in.

NOTE: Line all walls with 1" fiberglass insulation or similar material!

SOUNDSTREAM® TECHNOLOGIES

R & D Loudspeaker Performance Projection
SPL vs. Frequency (2.0 volts input / 1 meter)
Response includes 12 dB / Oct LP @ 100 Hz

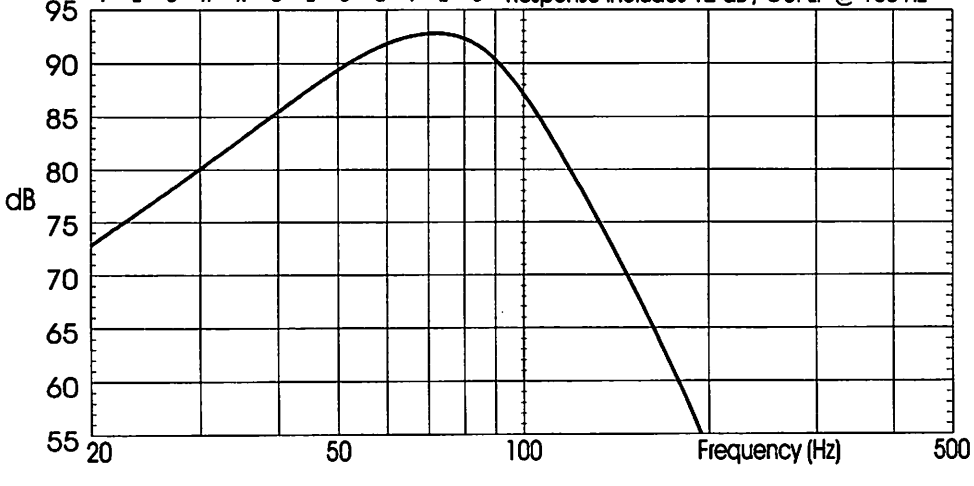

Application Notes:

CODE: S10REN7

SOUNDSTREAM®
TECHNOLOGIES

Woofer: Reference SS-10R
Enclosure Type: Sealed Bandpass #33
Music Type: Good all around enclosure

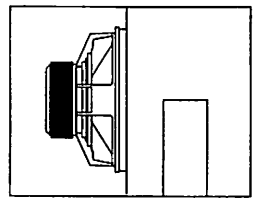

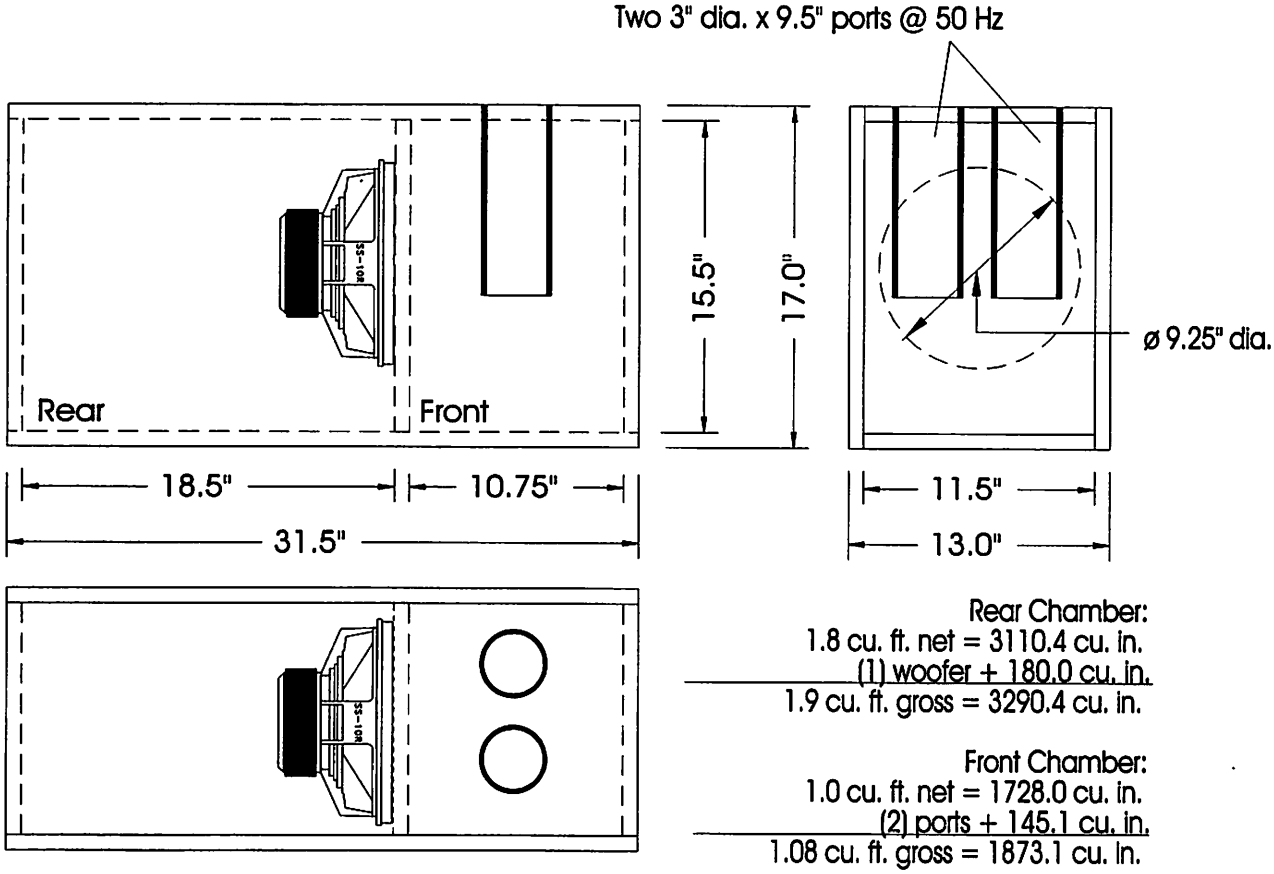

Rear Chamber:
1.8 cu. ft. net = 3110.4 cu. in.
(1) woofer + 180.0 cu. in.
1.9 cu. ft. gross = 3290.4 cu. in.

Front Chamber:
1.0 cu. ft. net = 1728.0 cu. in.
(2) ports + 145.1 cu. in.
1.08 cu. ft. gross = 1873.1 cu. in.

NOTE: Line all walls with 1" fiberglass insulation or similar material!

SOUNDSTREAM® TECHNOLOGIES
R & D Loudspeaker Performance Projection
SPL vs. Frequency (2.0 volts input / 1 meter)
Response includes 12 dB / Oct LP @ 100 Hz

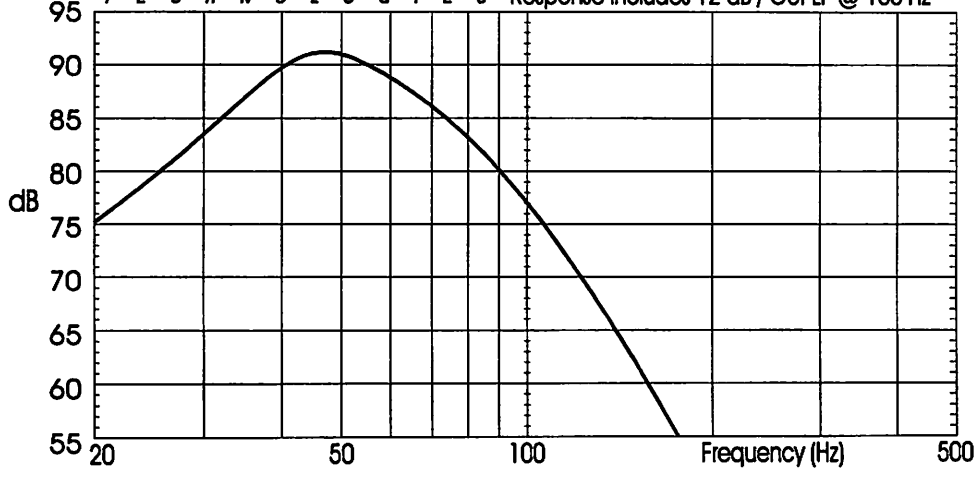

Application Notes:

CODE: S10REN8

SOUNDSTREAM®

TECHNOLOGIES

Woofer: Reference SS-10R
Enclosure Type: Sealed (Q = 0.7)
Music Type: Very good for jazz & classical, good for rock

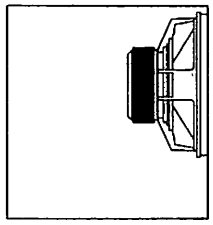

2.21 cu. ft. o.d.

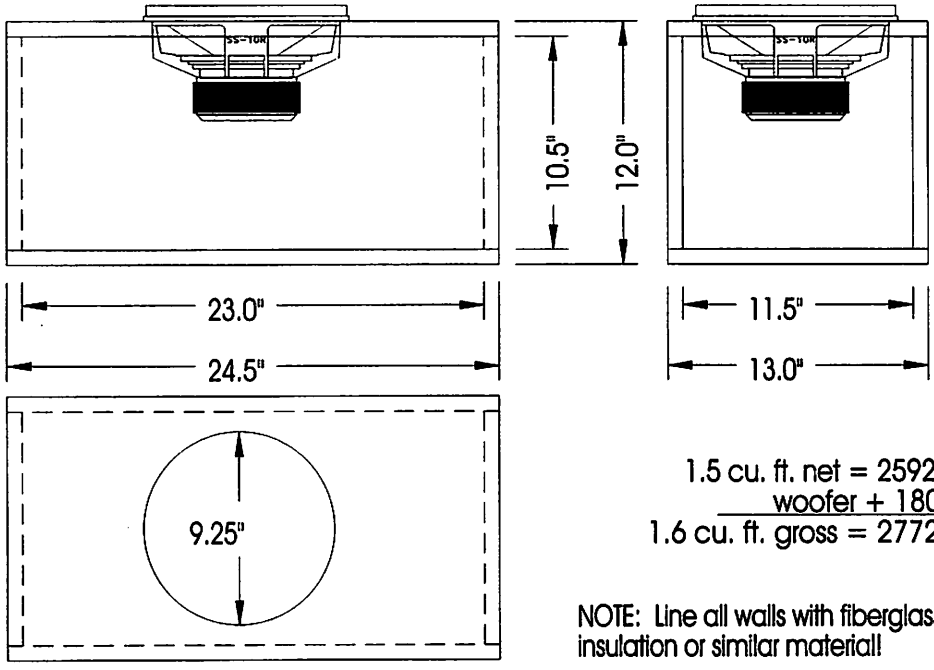

1.5 cu. ft. net = 2592.0 cu. in.
woofer + 180.0 cu. in.
1.6 cu. ft. gross = 2772.0 cu. in.

NOTE: Line all walls with fiberglass insulation or similar material!

SOUNDSTREAM® TECHNOLOGIES

R & D Loudspeaker Performance Projection
SPL vs. Frequency (2.0 volts input / 1 meter)
Response includes 12 dB / Oct LP @ 100 Hz

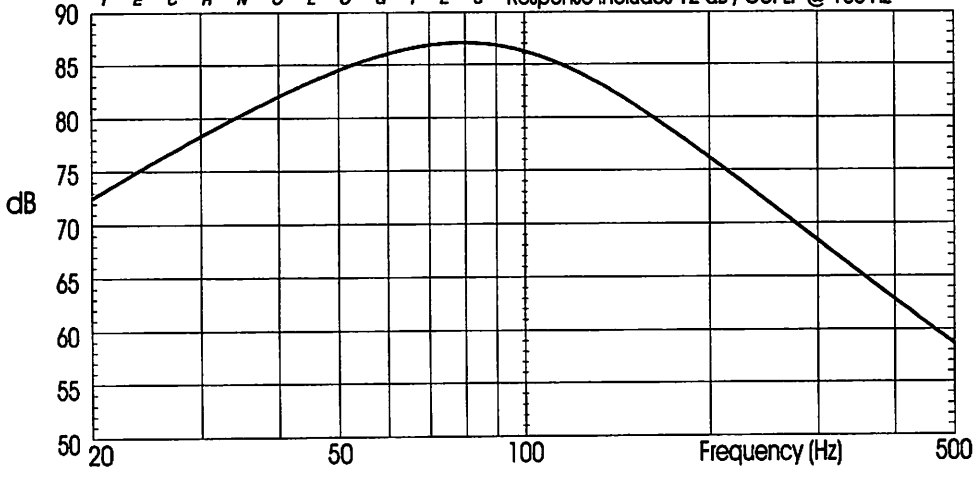

Application Notes:

-
-
-
-
-
-
-

CODE: S10REN9

SOUNDSTREAM®
TECHNOLOGIES

Woofer: Reference SS-10R
Enclosure Type: Vented
Music Type: Very good low frequency extension; very good for jazz

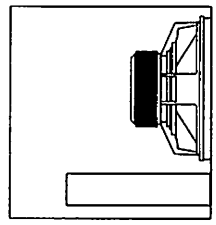

1.96 cu. ft. o.d.

One 3 " dia. x 9.75 " port @ 32 Hz

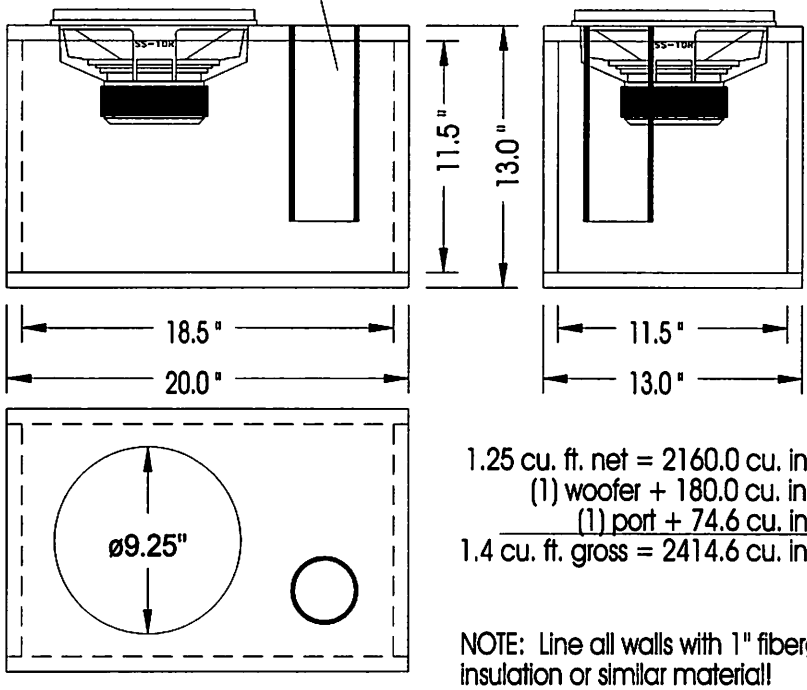

1.25 cu. ft. net = 2160.0 cu. in.
(1) woofer + 180.0 cu. in.
(1) port + 74.6 cu. in.
1.4 cu. ft. gross = 2414.6 cu. in.

NOTE: Line all walls with 1" fiberglass insulation or similar material!

SOUNDSTREAM® TECHNOLOGIES
R & D Loudspeaker Performance Projection
SPL vs. Frequency (2.0 volts input / 1 meter)
Response includes 12 dB / Oct LP @ 100 Hz

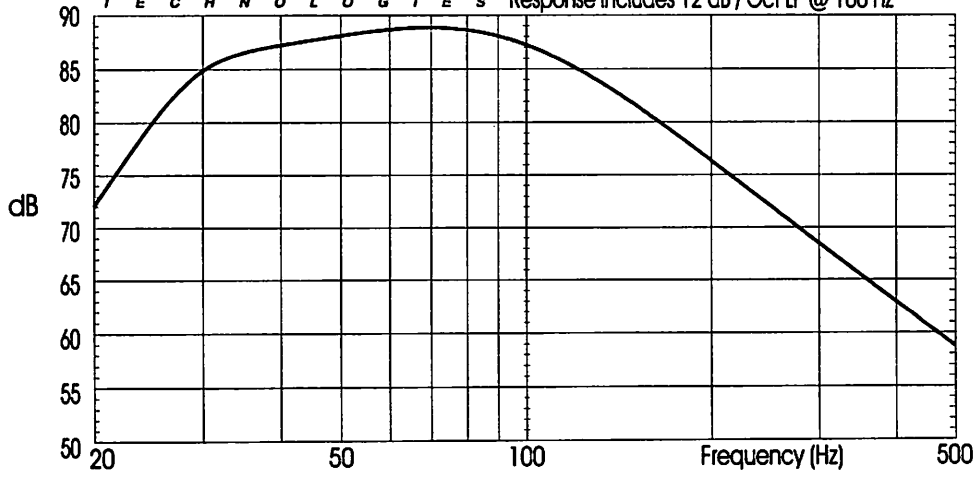

Application Notes:

CODE: S10REN10

SOUNDSTREAM®

TECHNOLOGIES

Woofer: Reference SS-12R
Enclosure Type: Sealed (Q = 0.7)
Music Type: Very good for classical, jazz; good for rock

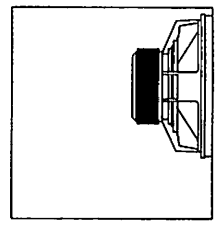

2.86 cu. ft. o.d.

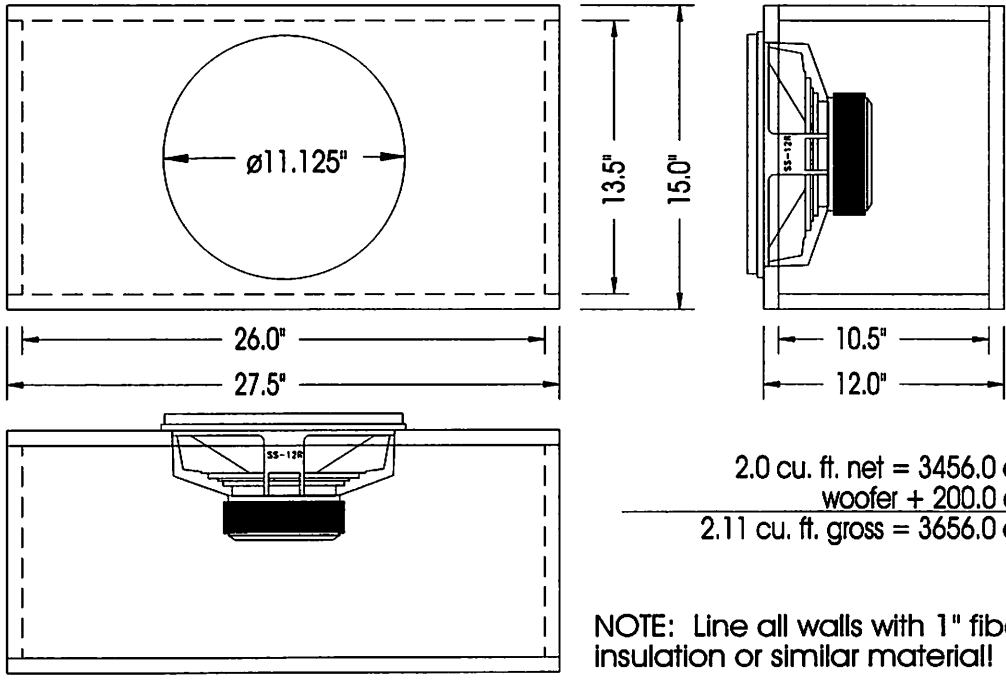

2.0 cu. ft. net = 3456.0 cu. in.
woofer + 200.0 cu. in.
2.11 cu. ft. gross = 3656.0 cu. in.

NOTE: Line all walls with 1" fiberglass insulation or similar material!

SOUNDSTREAM® TECHNOLOGIES

R & D Loudspeaker Performance Projection
SPL vs. Frequency (2.0 volts input / 1 meter)
Response includes 12 dB / Oct LP @ 100 Hz

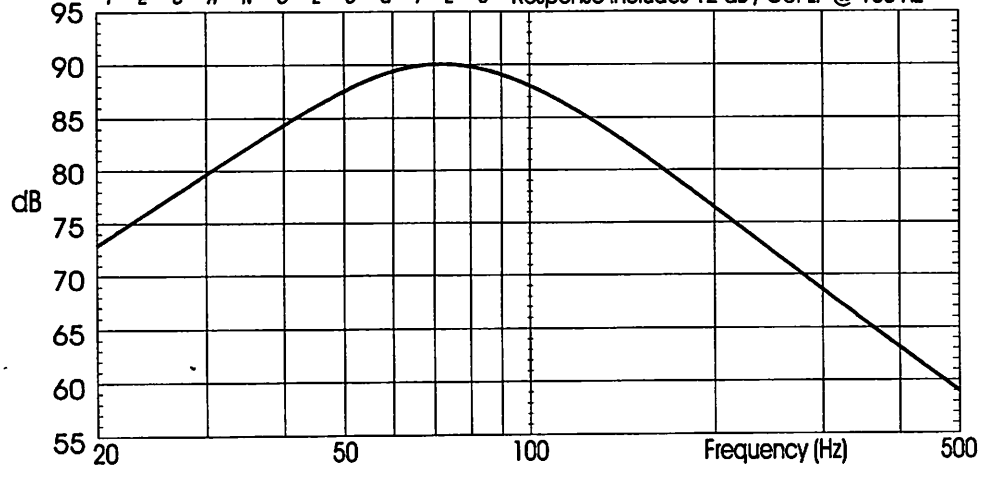

Application Notes:

- _____
- _____
- _____
- _____
- _____
- _____
- _____

CODE: S12REN1

SOUNDSTREAM®
TECHNOLOGIES

Woofer: Reference SS-12R
Enclosure Type: Vented
Music Type: Good for classical and jazz; very good for home use.

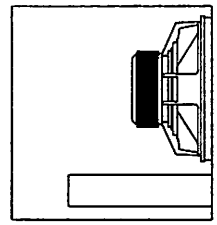
5.88 cu. ft. o.d.

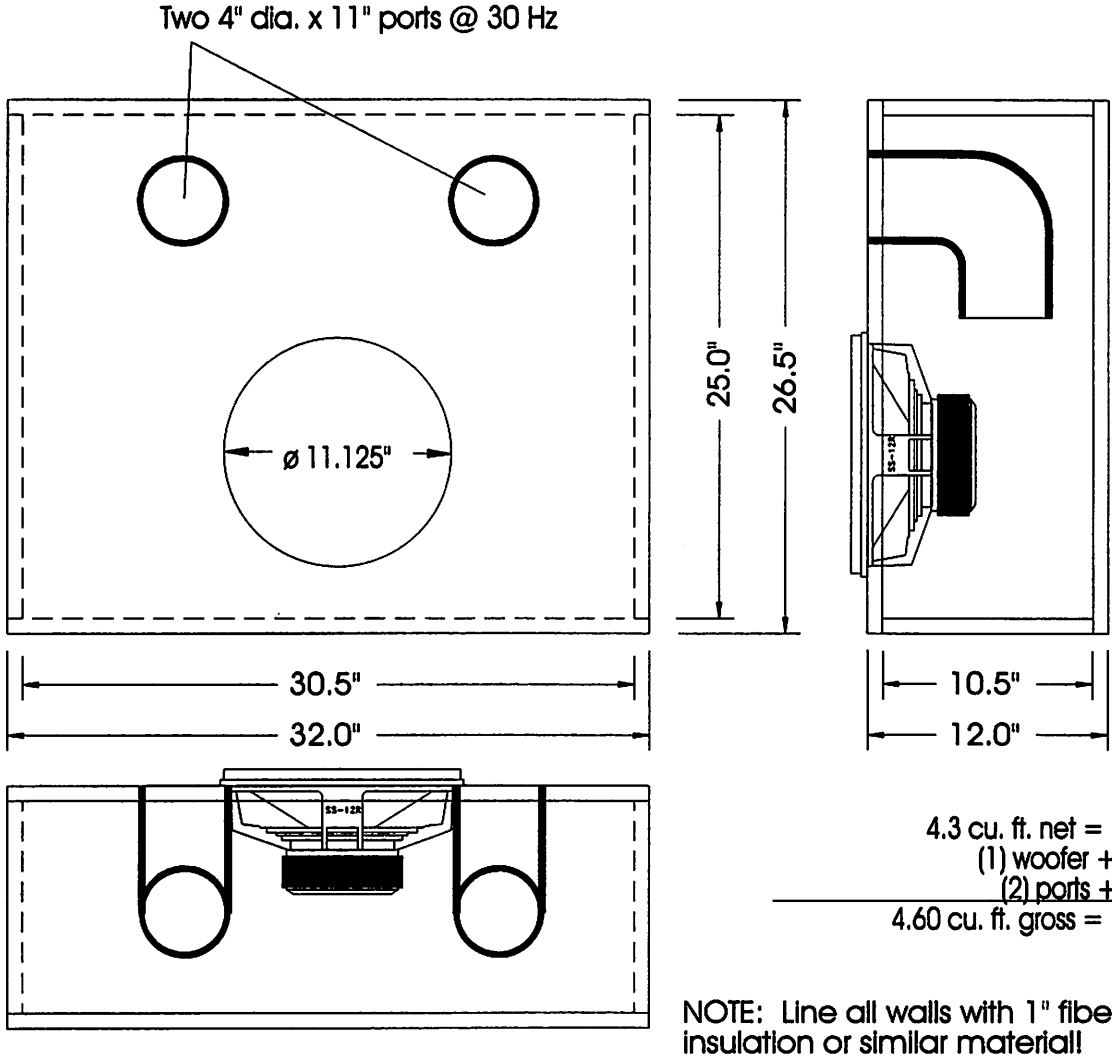

4.3 cu. ft. net = 7430.4 cu. in.
(1) woofer + 200.0 cu. in.
(2) ports + 326.0 cu. in.
4.60 cu. ft. gross = 7956.4 cu. in.

NOTE: Line all walls with 1" fiberglass insulation or similar material!

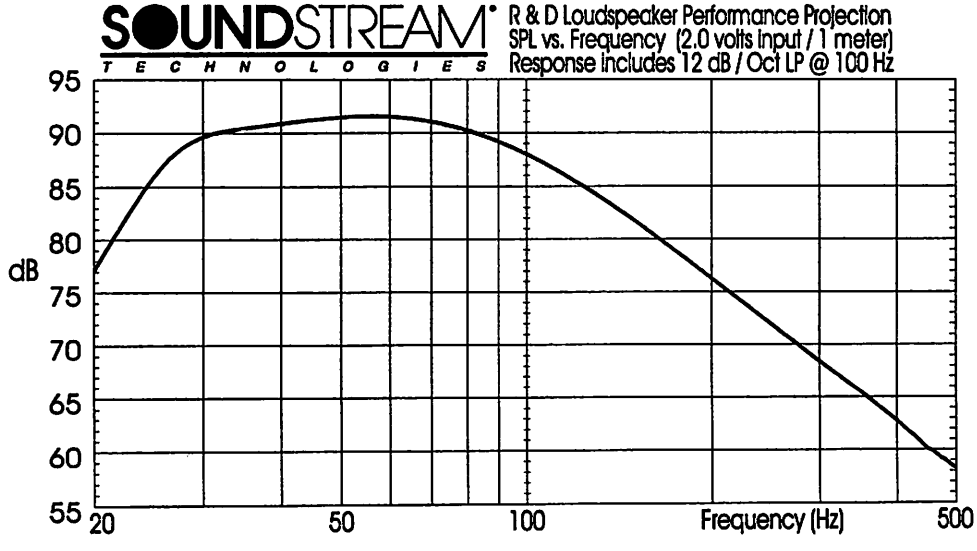

Application Notes:

CODE: S12REN2

SOUNDSTREAM®

TECHNOLOGIES

Woofer: Reference SS-12R
Enclosure Type: Vented
Music Type: Good all around enclosure

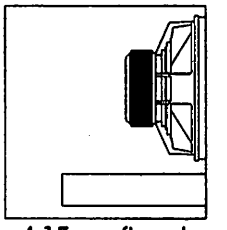

4.15 cu. ft. o.d.

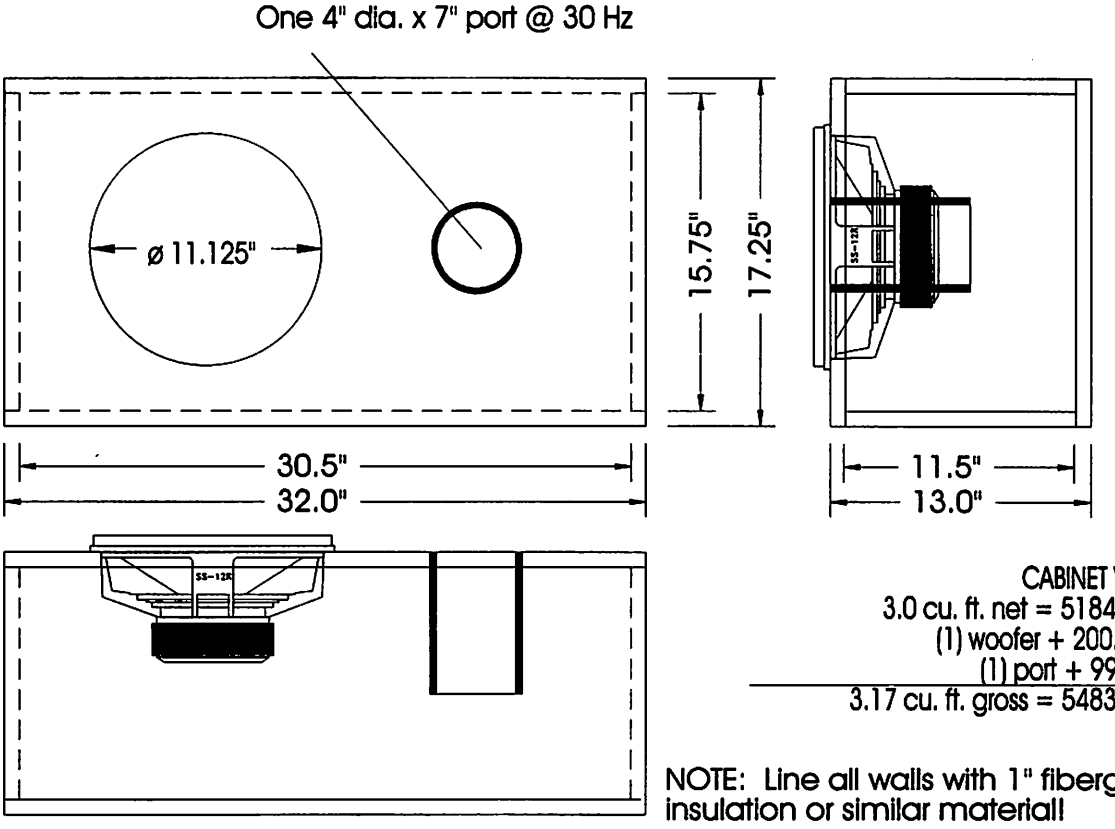

CABINET VOLUME:
3.0 cu. ft. net = 5184.0 cu. in.
(1) woofer + 200.0 cu. in.
(1) port + 99.4 cu. in.
3.17 cu. ft. gross = 5483.4 cu. in.

NOTE: Line all walls with 1" fiberglass insulation or similar material!

SOUNDSTREAM® TECHNOLOGIES

R & D Loudspeaker Performance Projection
SPL vs. Frequency (2.0 volts input / 1 meter)
Response includes 12 dB / Oct LP @ 100 Hz

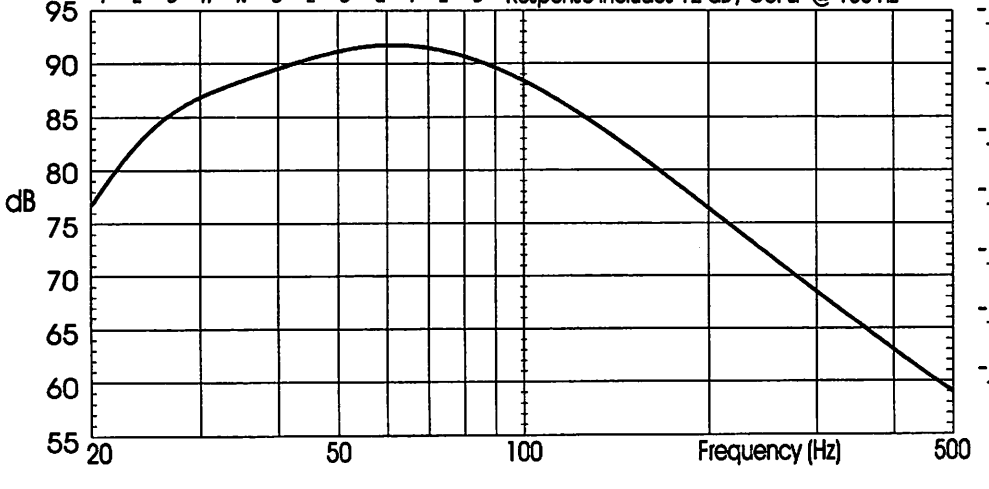

Application Notes:

-
-
-
-
-
-
-

CODE: S12REN3

SOUNDSTREAM®
TECHNOLOGIES

Woofer: Reference SS-12R
Enclosure Type: Vented Bandpass #40
Music Type: Super high SPL; good for Rock or Rap

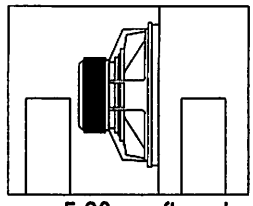
5.83 cu. ft. o.d.

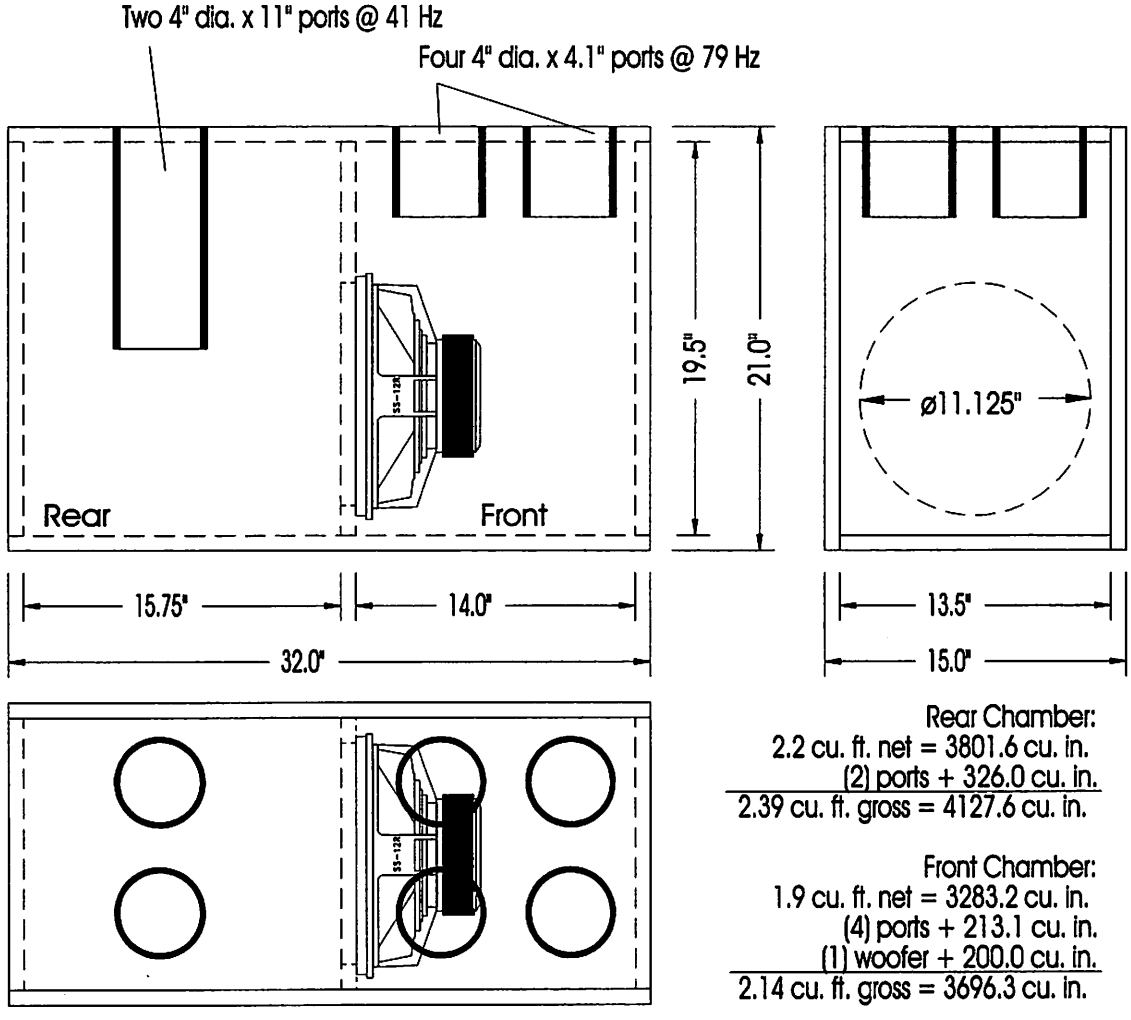

Rear Chamber:
2.2 cu. ft. net = 3801.6 cu. in.
(2) ports + 326.0 cu. in.
2.39 cu. ft. gross = 4127.6 cu. in.

Front Chamber:
1.9 cu. ft. net = 3283.2 cu. in.
(4) ports + 213.1 cu. in.
(1) woofer + 200.0 cu. in.
2.14 cu. ft. gross = 3696.3 cu. in.

NOTE: Line all walls with 1" fiberglass insulation or similar material!

SOUNDSTREAM® TECHNOLOGIES
R & D Loudspeaker Performance Projection
SPL vs. Frequency (2.0 volts input / 1 meter)
Response includes 12 dB / Oct LP @ 100 Hz

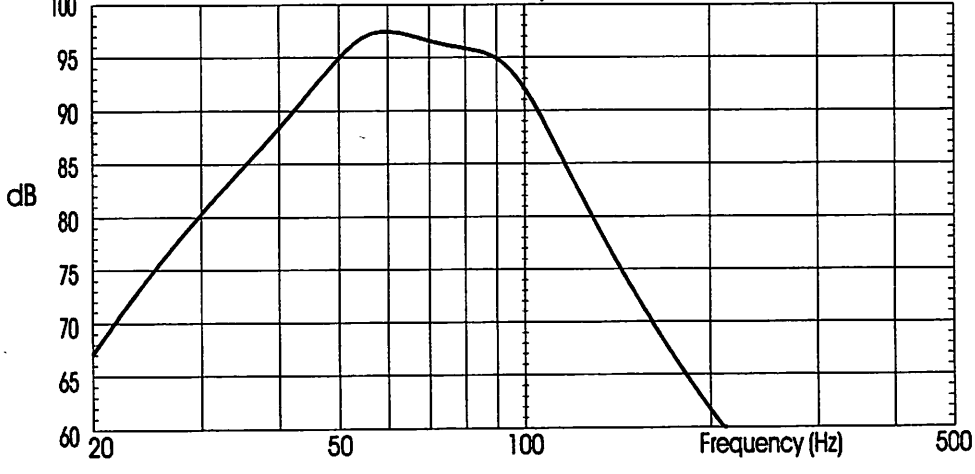

Application Notes:

CODE: S12REN4

SOUNDSTREAM®

TECHNOLOGIES

Woofer: Reference SS-12R
Enclosure Type: Sealed Bandpass #41
Music Type: Very high output, good for rap or rock

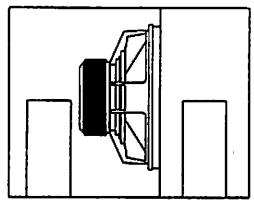

5.65 cu. ft. o.d.

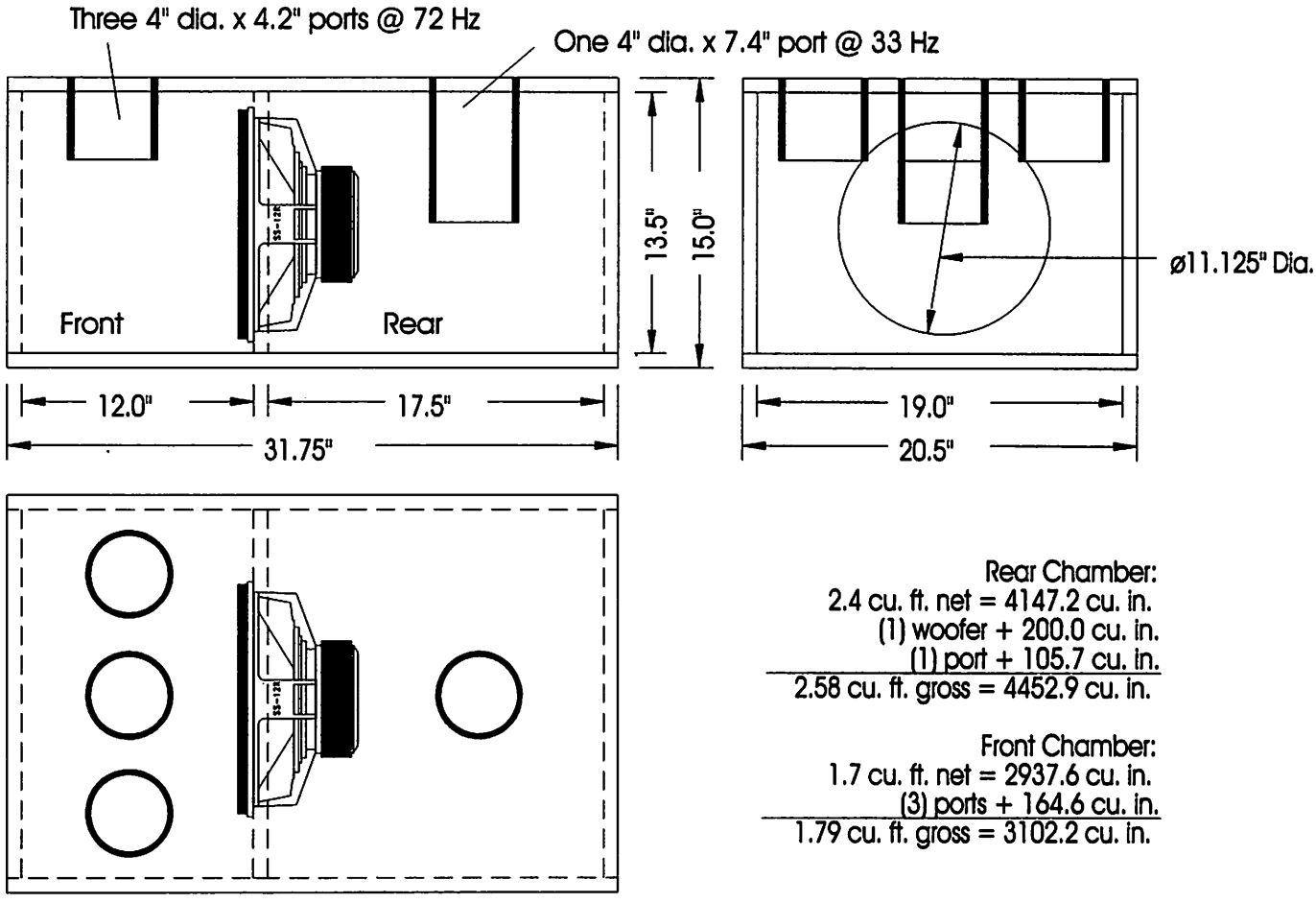

Rear Chamber:
2.4 cu. ft. net = 4147.2 cu. in.
(1) woofer + 200.0 cu. in.
(1) port + 105.7 cu. in.
2.58 cu. ft. gross = 4452.9 cu. in.

Front Chamber:
1.7 cu. ft. net = 2937.6 cu. in.
(3) ports + 164.6 cu. in.
1.79 cu. ft. gross = 3102.2 cu. in.

NOTE: Line all walls with 1" fiberglass insulation or similar material!

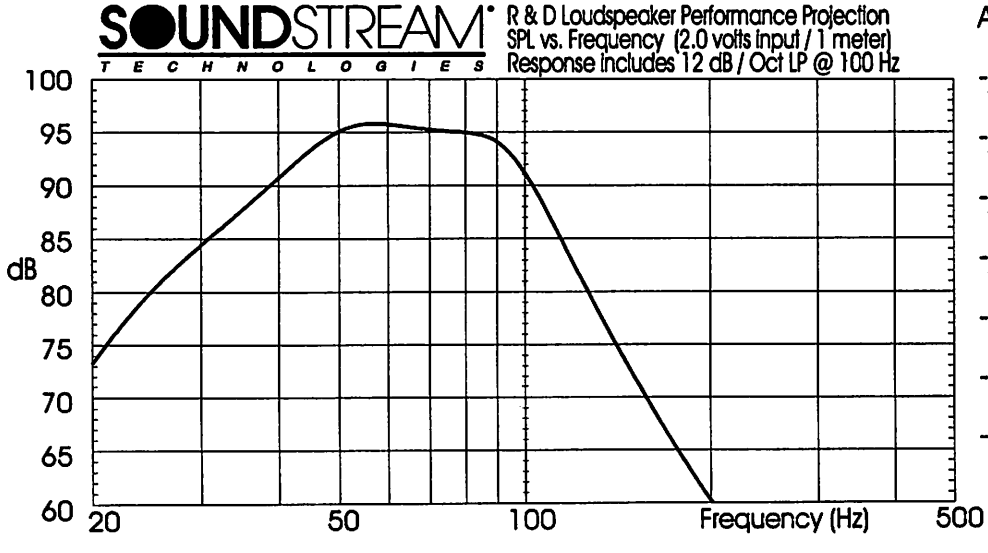

Application Notes:

CODE: S12REN5

SOUNDSTREAM®

TECHNOLOGIES

Woofer: Reference SS-12R
Enclosure Type: Vented Bandpass #42
Music Type: High output, good for rap, rock or pop

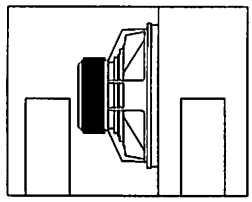

6.40 cu. ft. o.d.

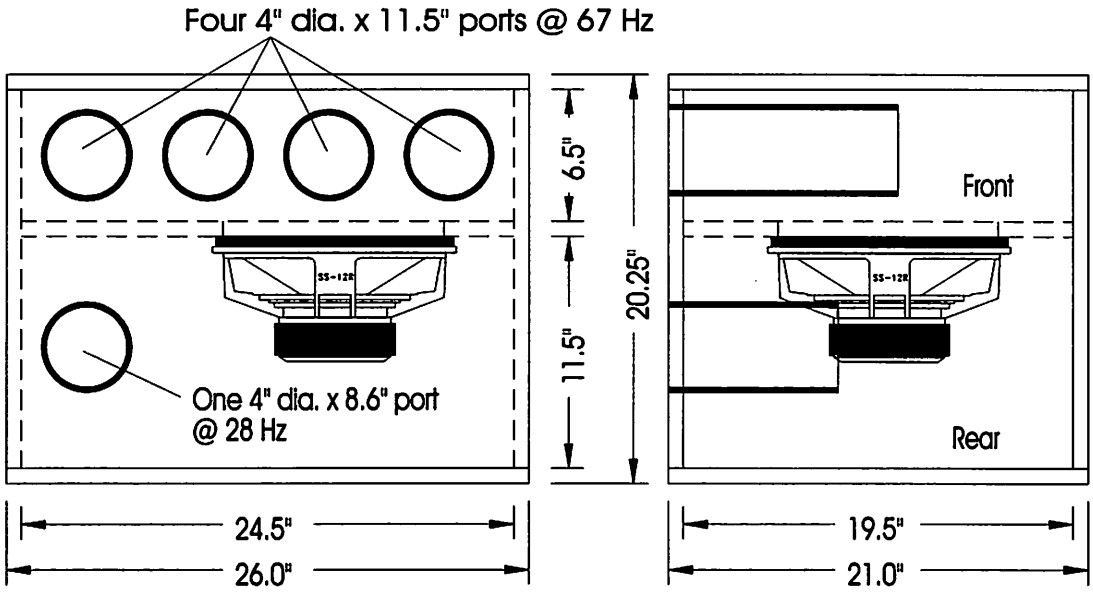

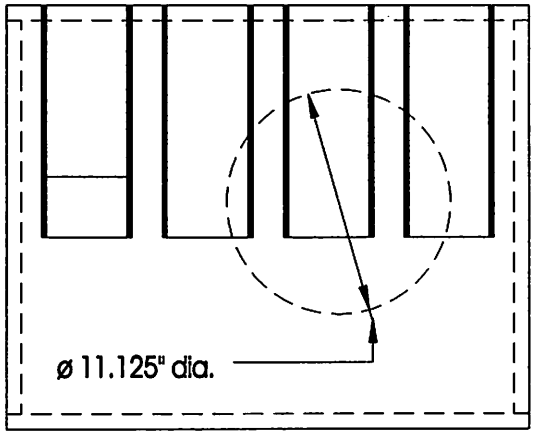

Rear Chamber:
3.0 cu. ft. net = 5184.0 cu. in.
(1) woofer + 200.0 cu. in.
(1) port + 124.8 cu. in.
3.19 cu. ft. gross = 5508.8 cu. in.

Front Chamber:
1.4 cu. ft. net = 2419.2 cu. in.
(4) ports + 683.7 cu. in.
1.80 cu. ft. gross = 3102.9 cu. in.

NOTE: Line all walls with 1" fiberglass insulation or similar material!

SOUNDSTREAM® TECHNOLOGIES

R & D Loudspeaker Performance Projection
SPL vs. Frequency (2.0 volts input / 1 meter)
Response includes 12 dB / Oct LP @ 100 Hz

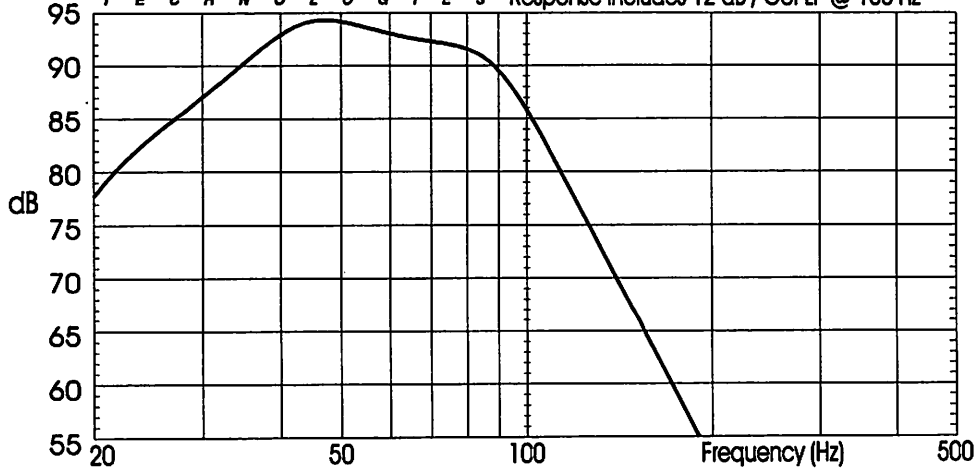

Application Notes:

CODE: S12REN6

SOUNDSTREAM®

TECHNOLOGIES

Woofer: Reference SS-12R
Enclosure Type: Sealed Bandpass #37
Music Type: Very high output, very good for Rap

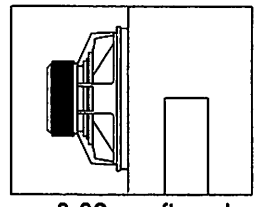

3.82 cu. ft. o.d.

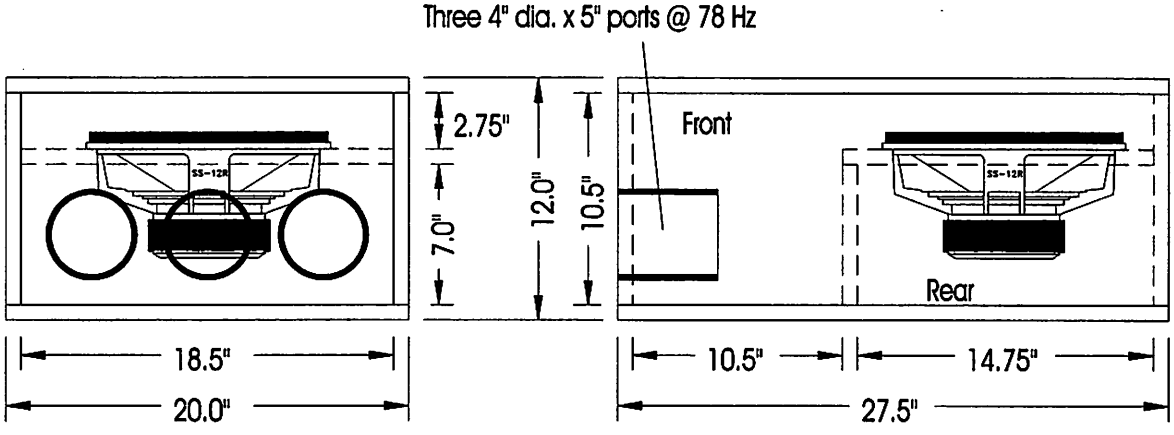

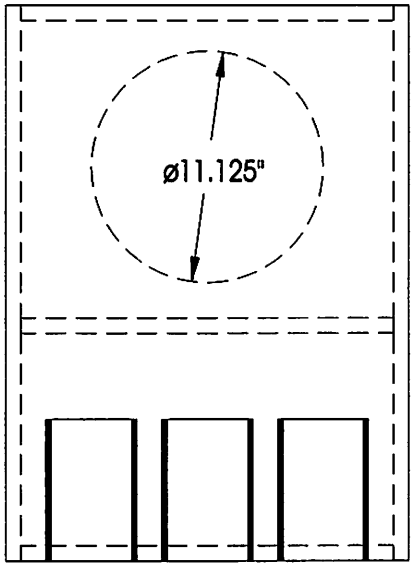

Rear Chamber:
1.0 cu. ft. net = 1728.0 cu. in.
(1) woofer + 180.0 cu. in.
1.1 cu. ft. gross = 1908.0 cu. in.

Front Chamber:
1.5 cu. ft. net = 2592.0 cu. in.
(3) ports + 202.7 cu. in.
1.62 cu. ft. gross = 2794.7 cu. in.

NOTE: Line all walls with 1" fiberglass insulation or similar material!

SOUNDSTREAM® TECHNOLOGIES

R & D Loudspeaker Performance Projection
SPL vs. Frequency (2.0 volts input / 1 meter)
Response includes 12 dB / Oct LP @ 100 Hz

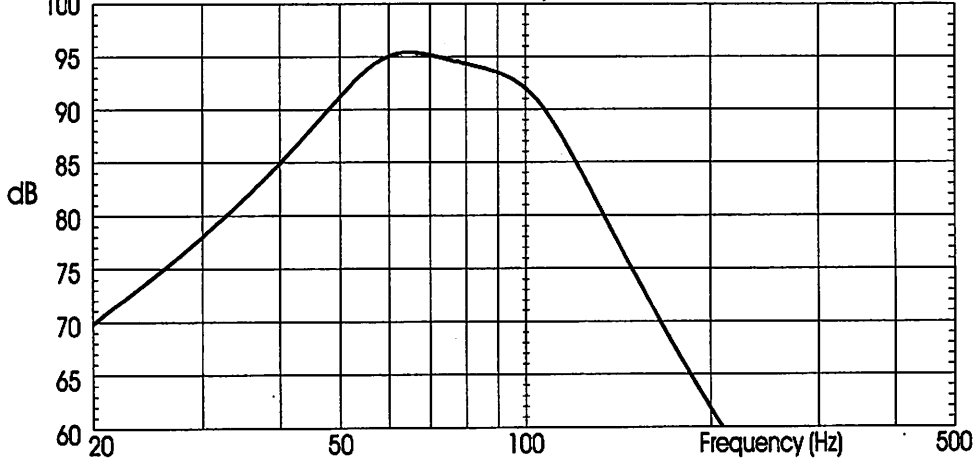

Application Notes:

- _____
- _____
- _____
- _____
- _____
- _____
- _____

CODE: S12REN7

SOUNDSTREAM®

TECHNOLOGIES

Woofer: Reference SS-12R
Enclosure Type: Sealed Bandpass #38
Music Type: High output with good bass extension

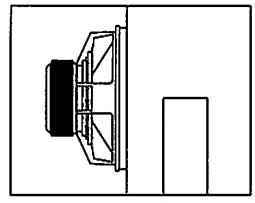

5.15 cu. ft. o.d.

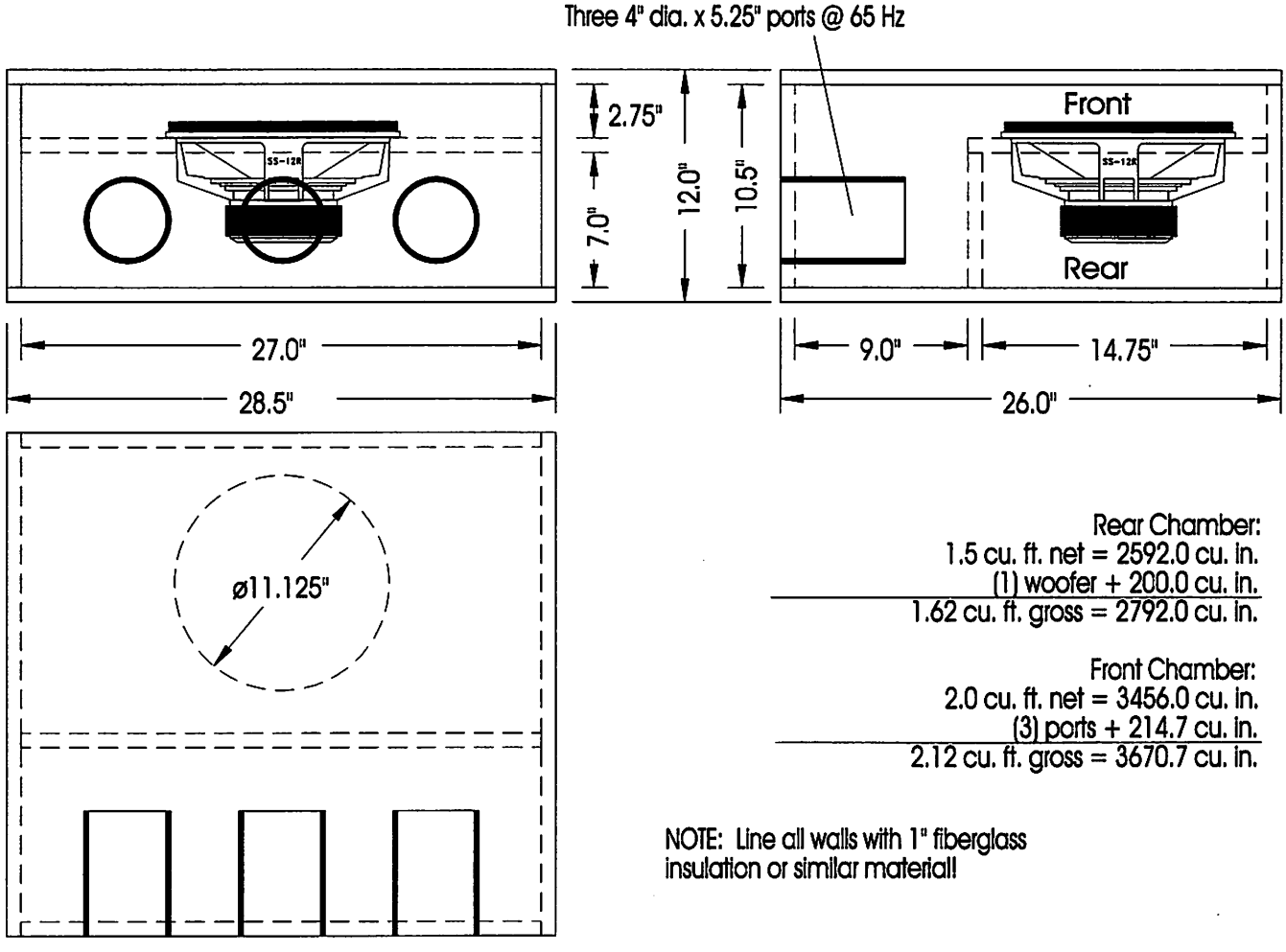

Rear Chamber:
1.5 cu. ft. net = 2592.0 cu. in.
(1) woofer + 200.0 cu. in.
1.62 cu. ft. gross = 2792.0 cu. in.

Front Chamber:
2.0 cu. ft. net = 3456.0 cu. in.
(3) ports + 214.7 cu. in.
2.12 cu. ft. gross = 3670.7 cu. in.

NOTE: Line all walls with 1" fiberglass insulation or similar material!

SOUNDSTREAM® TECHNOLOGIES

R & D Loudspeaker Performance Projection
SPL vs. Frequency (2.0 volts input / 1 meter)
Response includes 12 dB / Oct LP @ 100 Hz

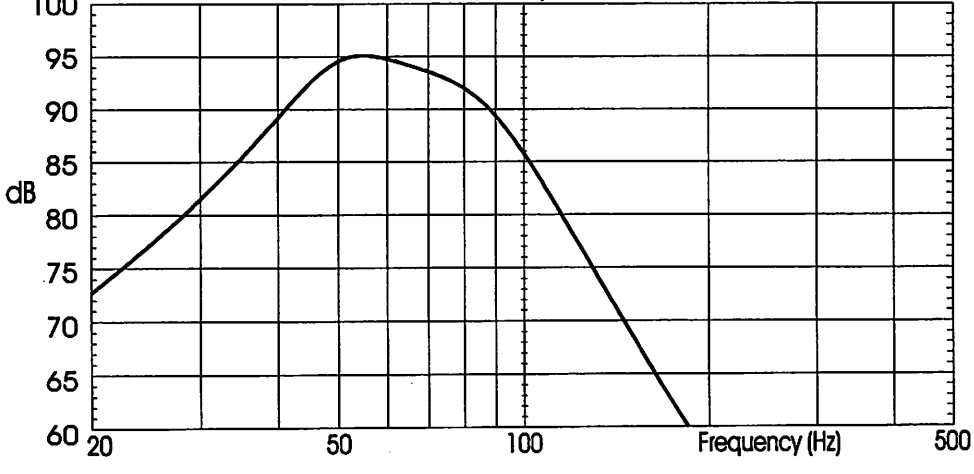

Application Notes:

-
-
-
-
-
-
-

CODE: S12REN8

SOUNDSTREAM®
TECHNOLOGIES

Woofer: Reference SS-12R
Enclosure Type: Sealed Bandpass #39 (Isobaric Configuration)
Music Type: Very high output with good bass extension

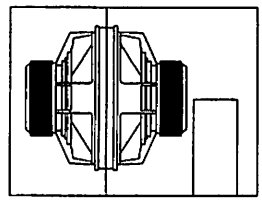
3.95 cu. ft. o.d.

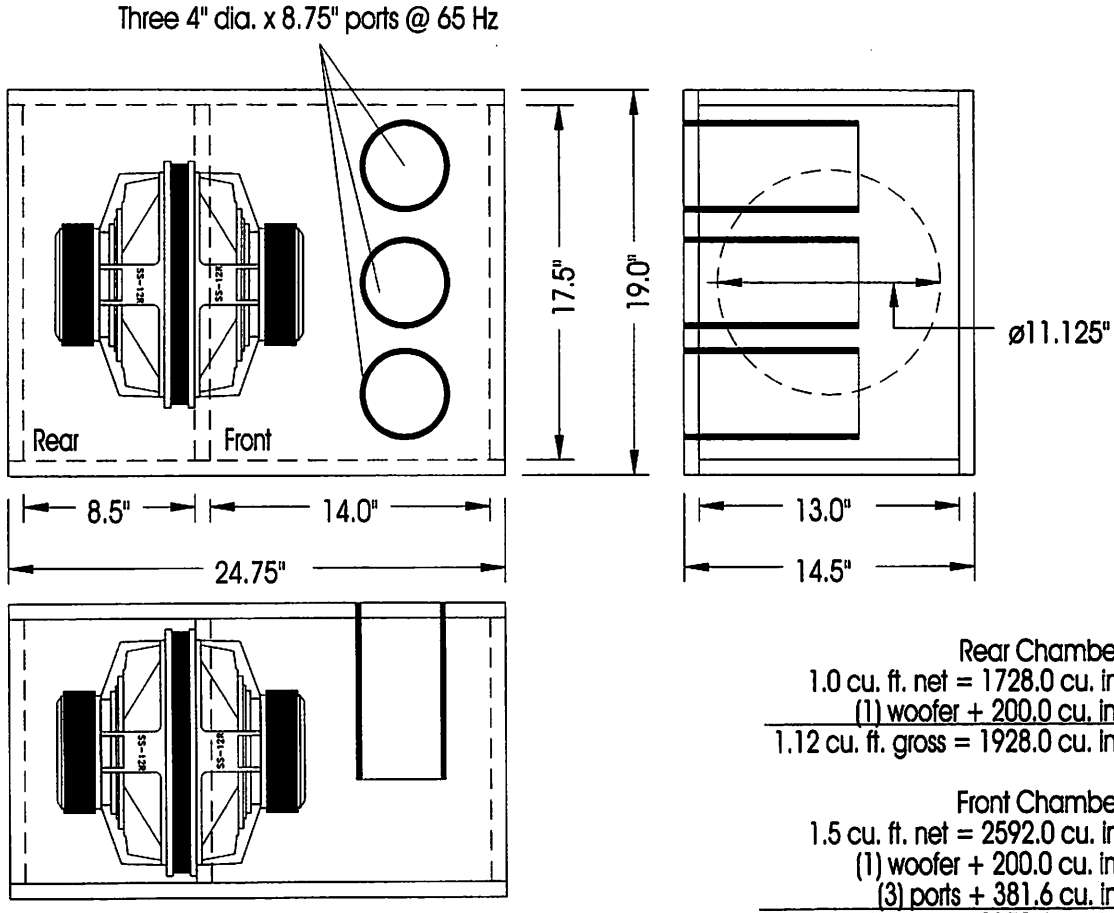

Rear Chamber:
1.0 cu. ft. net = 1728.0 cu. in.
(1) woofer + 200.0 cu. in.
1.12 cu. ft. gross = 1928.0 cu. in.

Front Chamber:
1.5 cu. ft. net = 2592.0 cu. in.
(1) woofer + 200.0 cu. in.
(3) ports + 381.6 cu. in.
1.84 cu. ft. gross = 3173.6 cu. in.

NOTE: Line all walls with 1" fiberglass insulation or similar material!

SOUNDSTREAM® TECHNOLOGIES
R & D Loudspeaker Performance Projection
SPL vs. Frequency (2.0 volts input / 1 meter)
Response includes 12 dB / Oct LP @ 100 Hz

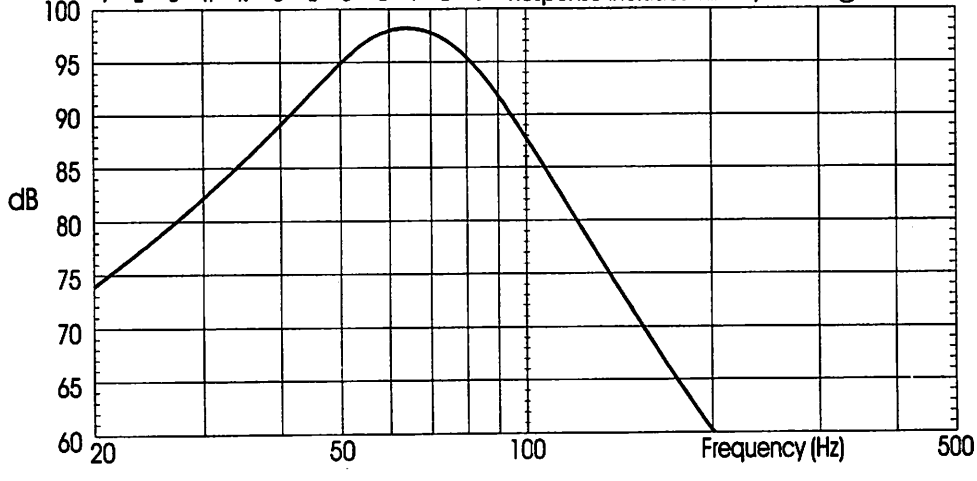

Application Notes:

CODE: S12REN9

SOUNDSTREAM®
TECHNOLOGIES

Woofer: Reference SS-12R
Enclosure Type: Sealed Bandpass (2 woofer / 3 chamber version)
Music Type: High SPL; Rock or Rap

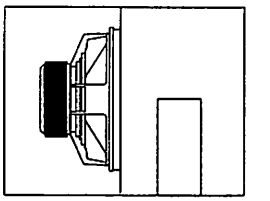
7.80 cu. ft. o.d.

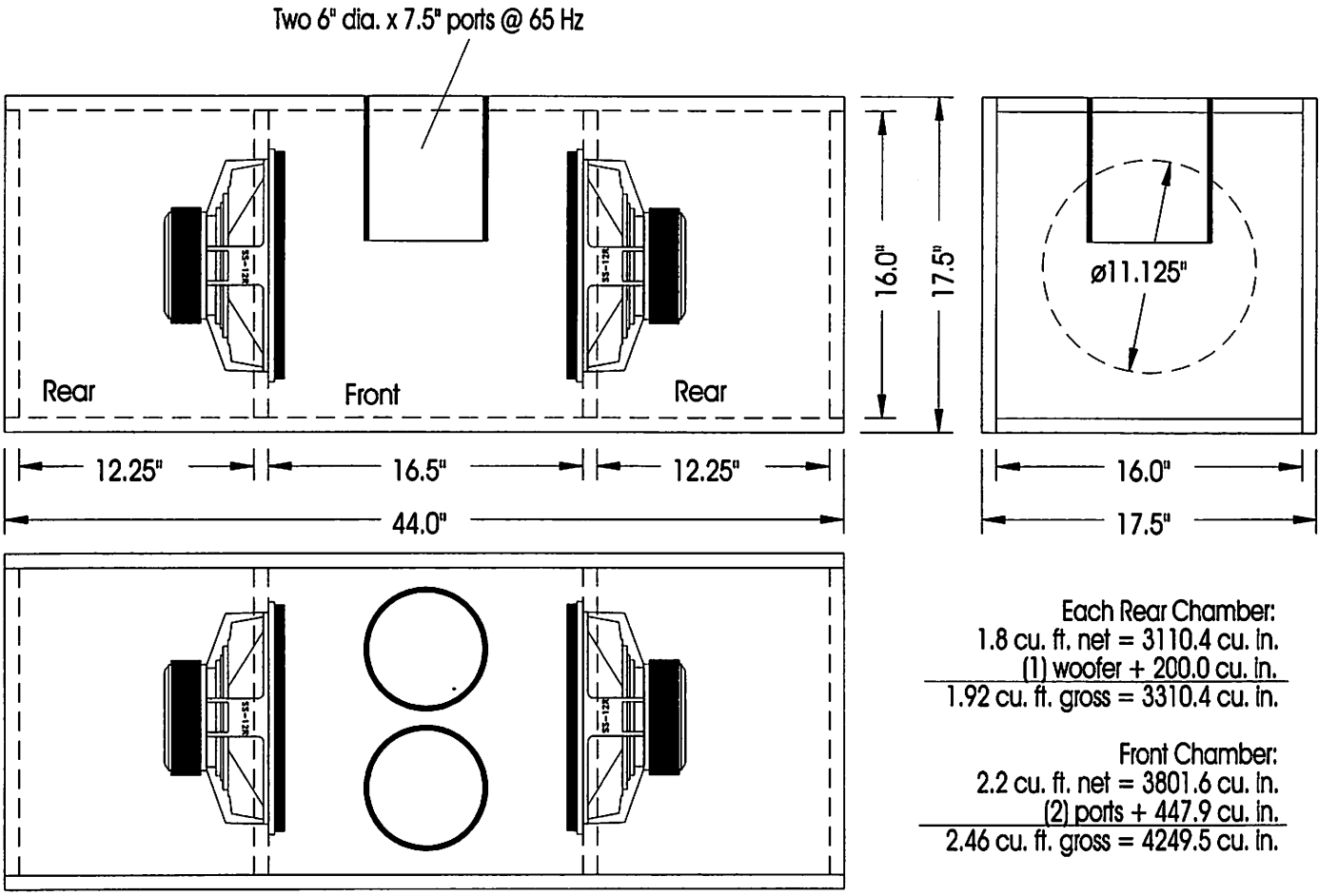

Each Rear Chamber:
1.8 cu. ft. net = 3110.4 cu. in.
(1) woofer + 200.0 cu. in.
1.92 cu. ft. gross = 3310.4 cu. in.

Front Chamber:
2.2 cu. ft. net = 3801.6 cu. in.
(2) ports + 447.9 cu. in.
2.46 cu. ft. gross = 4249.5 cu. in.

NOTE: Line all walls with 1" fiberglass insulation or similar material!

SOUNDSTREAM® TECHNOLOGIES
R & D Loudspeaker Performance Projection
SPL vs. Frequency (2.0 volts input / 1 meter)
Response includes 12 dB / Oct LP @ 100 Hz

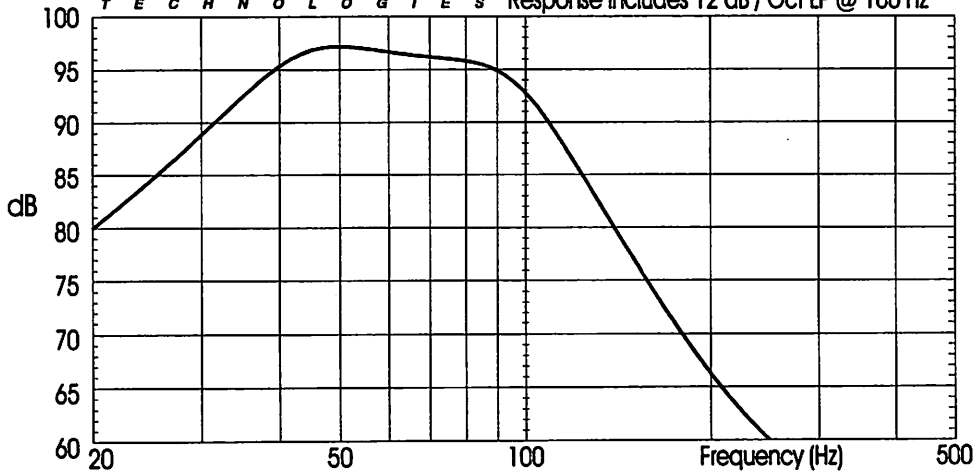

Application Notes:

CODE: S12REN10

SOUNDSTREAM®
TECHNOLOGIES

Woofer: Reference SS-12R
Enclosure Type: Sealed Bandpass #37 (3 woofer version)
Music Type: Very high output for pick-up trucks

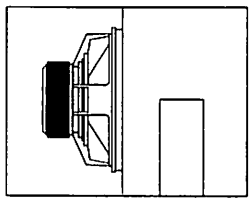

10.7 cu. ft. o.d.

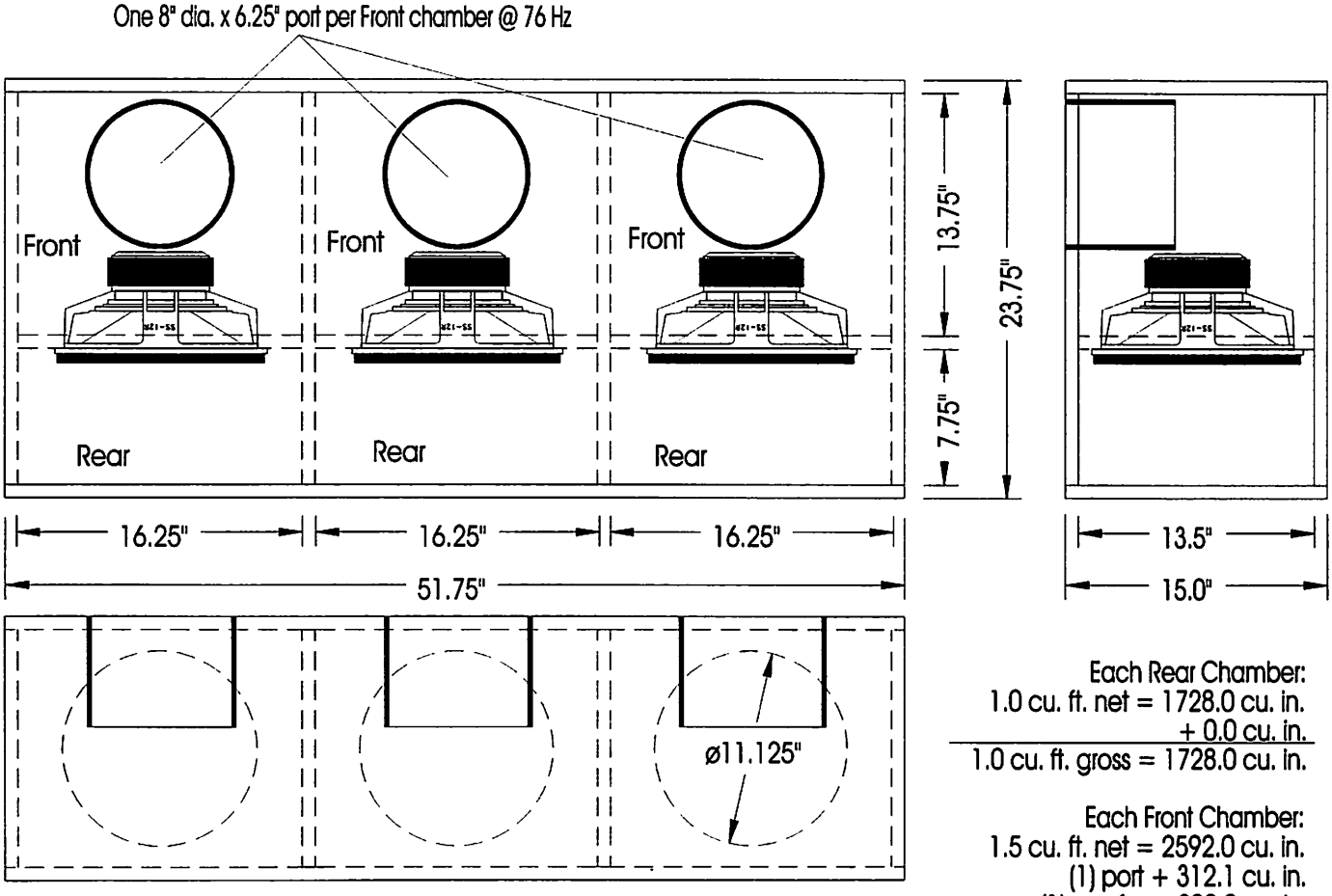

Each Rear Chamber:
1.0 cu. ft. net = 1728.0 cu. in.
+ 0.0 cu. in.
1.0 cu. ft. gross = 1728.0 cu. in.

Each Front Chamber:
1.5 cu. ft. net = 2592.0 cu. in.
(1) port + 312.1 cu. in.
(1) woofer + 200.0 cu. in.
1.80 cu. ft. gross = 3104.1 cu. in.

NOTE: Line all walls with 1" fiberglass insulation or similar material!

SOUNDSTREAM® TECHNOLOGIES
R & D Loudspeaker Performance Projection
SPL vs. Frequency (2.0 volts input / 1 meter)
Response includes 12 dB / Oct LP @ 100 Hz

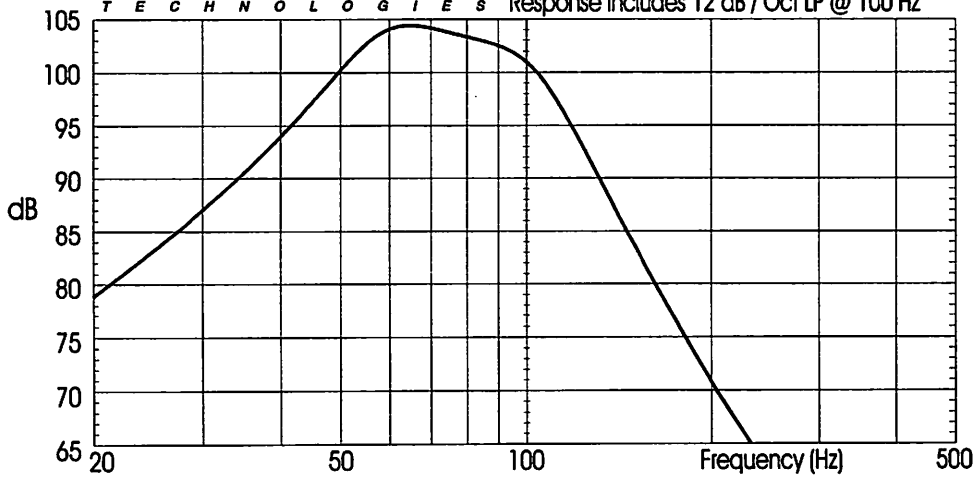

Application Notes:

CODE: S12REN11

SOUNDSTREAM®

TECHNOLOGIES

Woofer: Granite Pro 8
Enclosure Type: Sealed Bandpass (2 woofer / 3 chamber version)
Music Type: High SPL; Rock or Rap

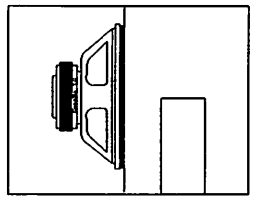

4.43 cu. ft. o.d.

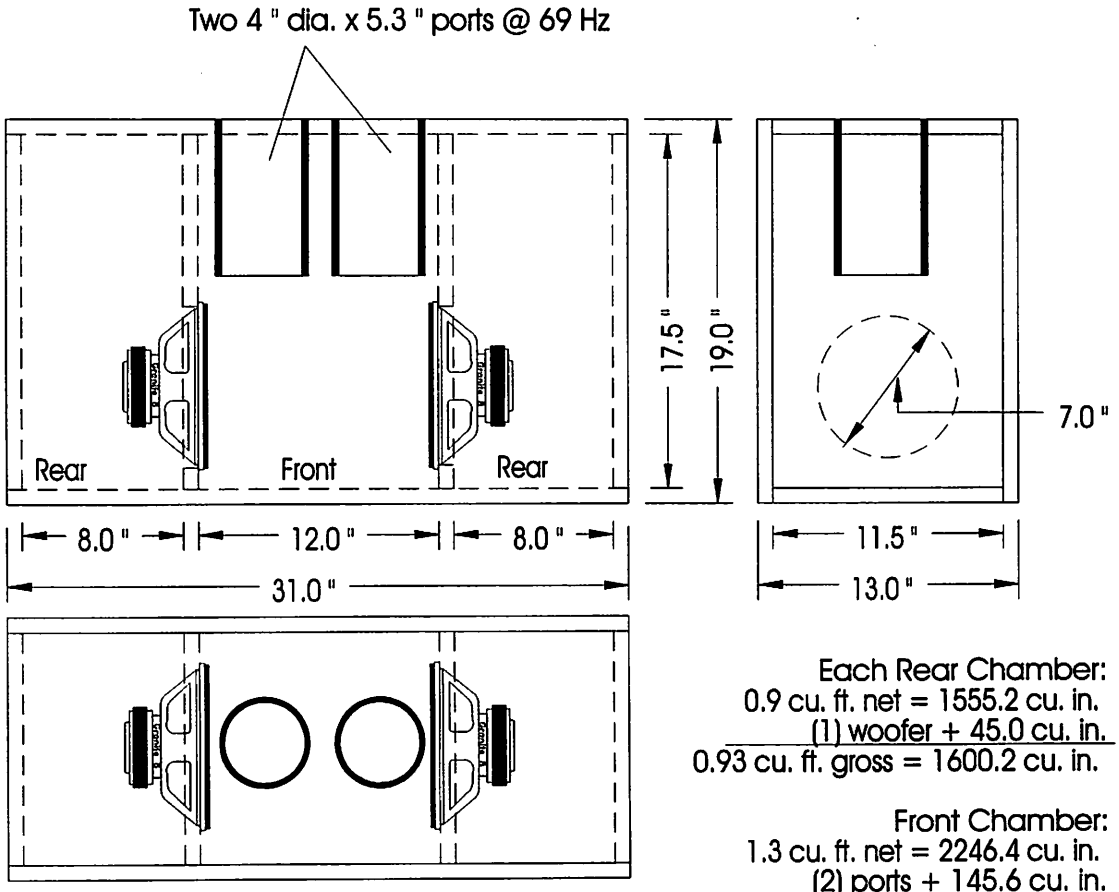

Each Rear Chamber:
0.9 cu. ft. net = 1555.2 cu. in.
(1) woofer + 45.0 cu. in.
0.93 cu. ft. gross = 1600.2 cu. in.

Front Chamber:
1.3 cu. ft. net = 2246.4 cu. in.
(2) ports + 145.6 cu. in.
1.38 cu. ft. gross = 2392.0 cu. in.

NOTE: Line all walls with 1" fiberglass insulation or similar material!

SOUNDSTREAM® TECHNOLOGIES
R & D Loudspeaker Performance Projection
SPL vs. Frequency (2.0 volts input / 1 meter)
Response includes 12 dB / Oct LP @ 100 Hz

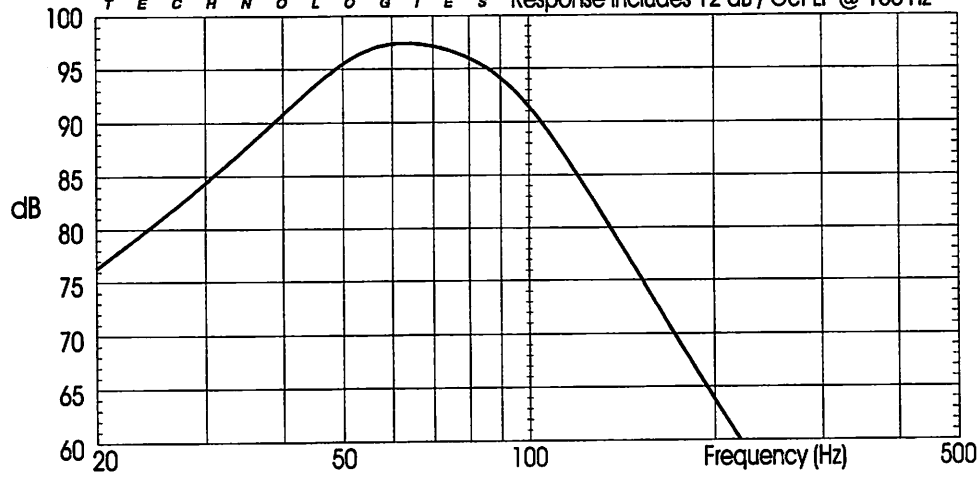

Application Notes:

- _____
- _____
- _____
- _____
- _____
- _____
- _____

CODE: G8EN1

SOUNDSTREAM®

TECHNOLOGIES

Woofer: Granite Pro 8
Enclosure Type: Sealed
Music Type: Excellent for midbass

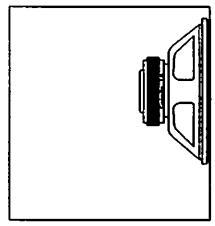

0.82 cu. ft. o.d.

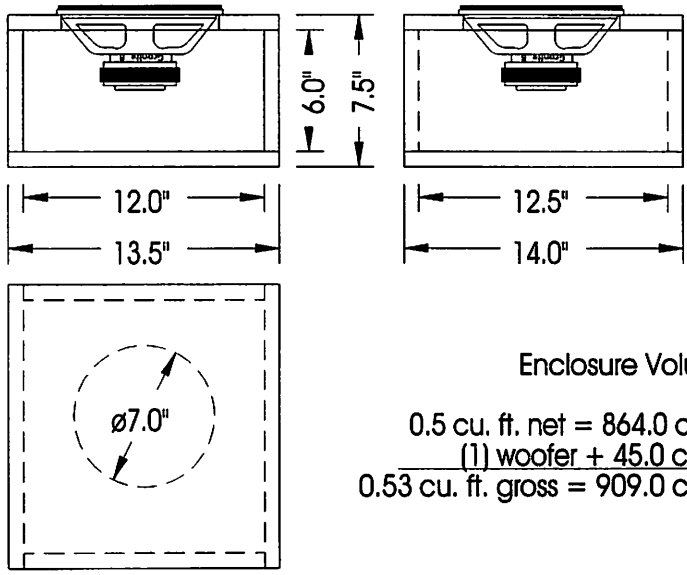

Enclosure Volume:

0.5 cu. ft. net = 864.0 cu. in.
(1) woofer + 45.0 cu. in.
0.53 cu. ft. gross = 909.0 cu. in.

NOTE: Enclosure must be stuffed with fiberglass or other acoustic insulation!

SOUNDSTREAM® TECHNOLOGIES

R & D Loudspeaker Performance Projection
SPL vs. Frequency (2.0 volts input / 1 meter)
Response includes 12 dB / Oct LP @ 100 Hz

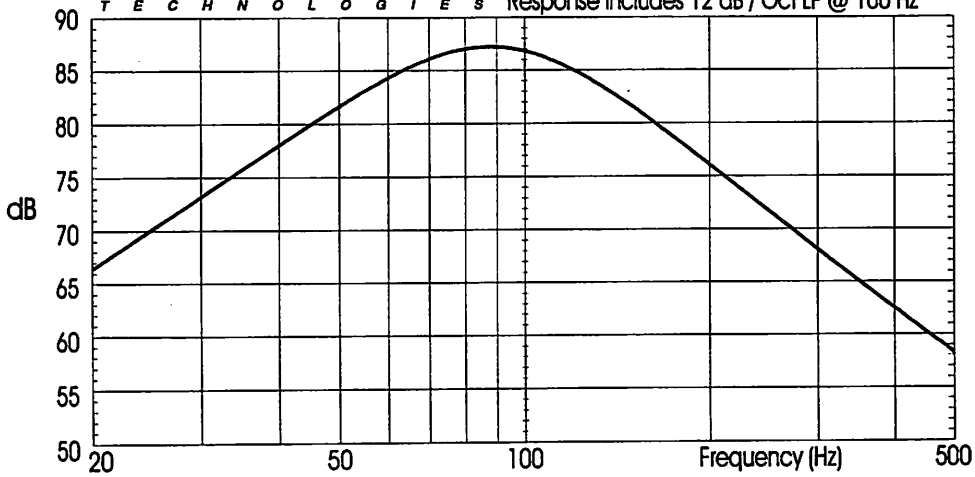

Application Notes:

-
-
-
-
-
-
-

CODE: G8EN2

SOUNDSTREAM®
TECHNOLOGIES

Woofer: Granite Pro 8
Enclosure Type: Sealed
Music Type: Good for classical & jazz

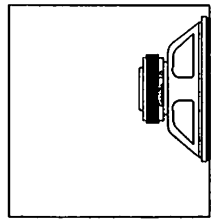

1.47 cu. ft. o.d.

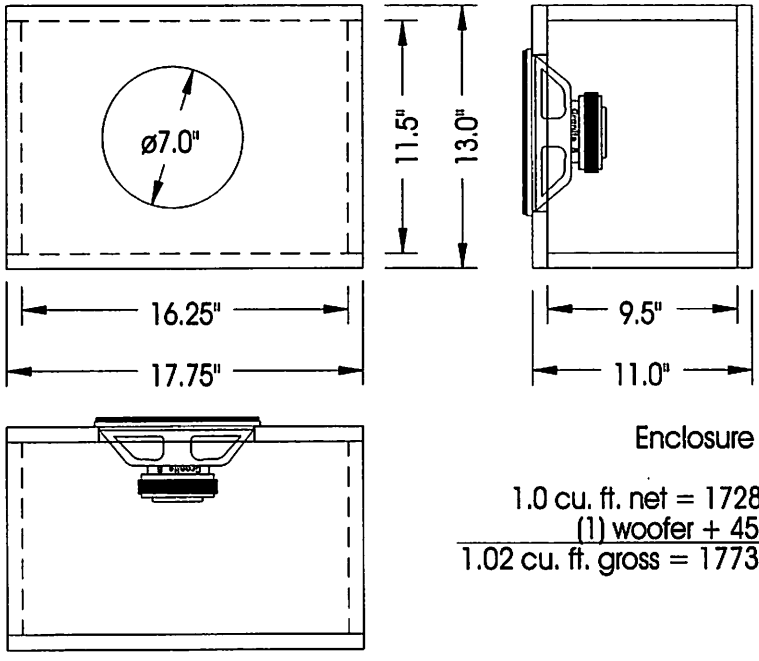

Enclosure Volume:

1.0 cu. ft. net = 1728.0 cu. in.
(1) woofer + 45.0 cu. in.
1.02 cu. ft. gross = 1773.0 cu. in.

NOTE: Line all walls with 1" fiberglass insulation or similar material!

SOUNDSTREAM® TECHNOLOGIES
R & D Loudspeaker Performance Projection
SPL vs. Frequency (2.0 volts input / 1 meter)
Response includes 12 dB / Oct LP @ 100 Hz

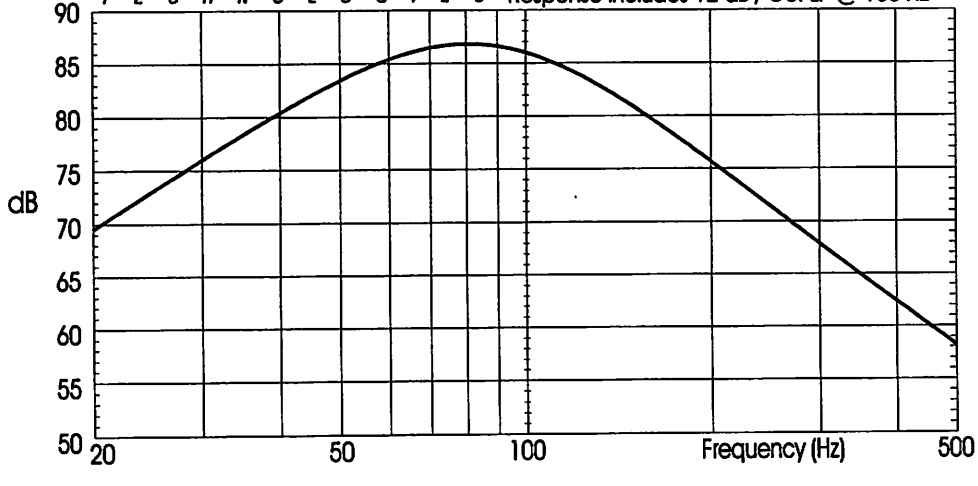

Application Notes:

CODE: G8EN3

SOUNDSTREAM®

TECHNOLOGIES

Woofer: Granite Pro 8
Enclosure Type: Vented
Music Type: Very good for jazz and rock, good for classical & rap

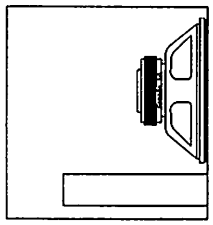

1.52 cu. ft. o.d.

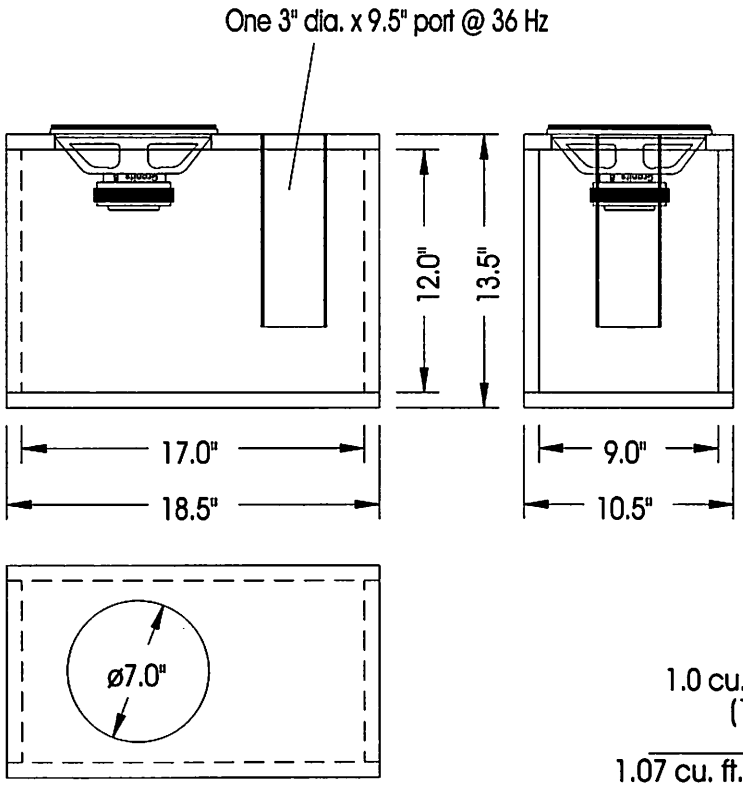

Enclosure Volume:

1.0 cu. ft. net = 1728.0 cu. in.
(1) woofer + 45.0 cu. in.
(1) port + 72.5 cu. in.
1.07 cu. ft. gross = 1845.5 cu. in.

NOTE: Line all walls with 1" fiberglass insulation or similar material!

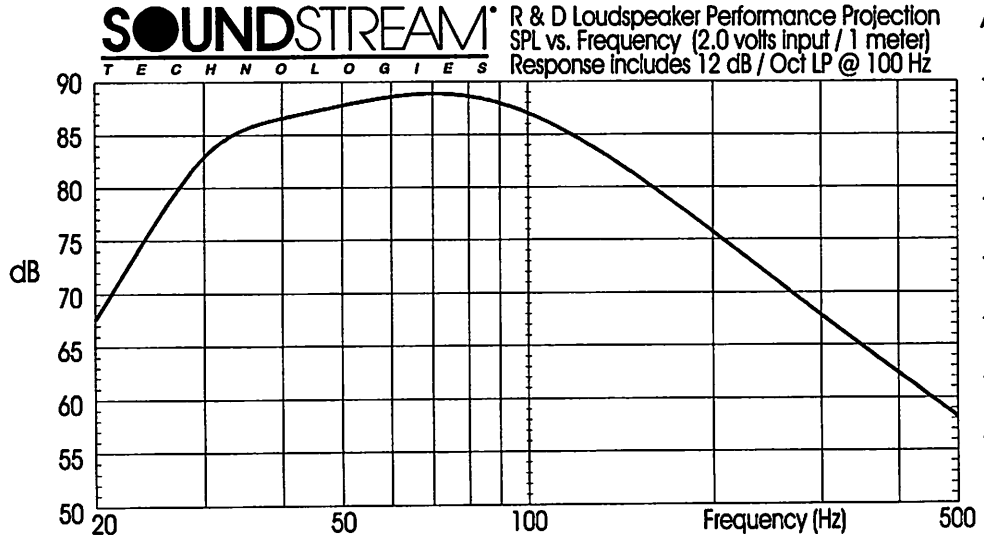

Application Notes:

- _____
- _____
- _____
- _____
- _____
- _____
- _____

CODE: G8EN4

SOUNDSTREAM®
TECHNOLOGIES

Woofer: Granite Pro 8
Enclosure Type: Vented Bandpass #28
Music Type: High SPL; Rock or Rap

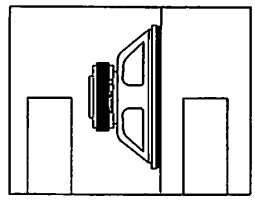
1.90 cu. ft. o.d.

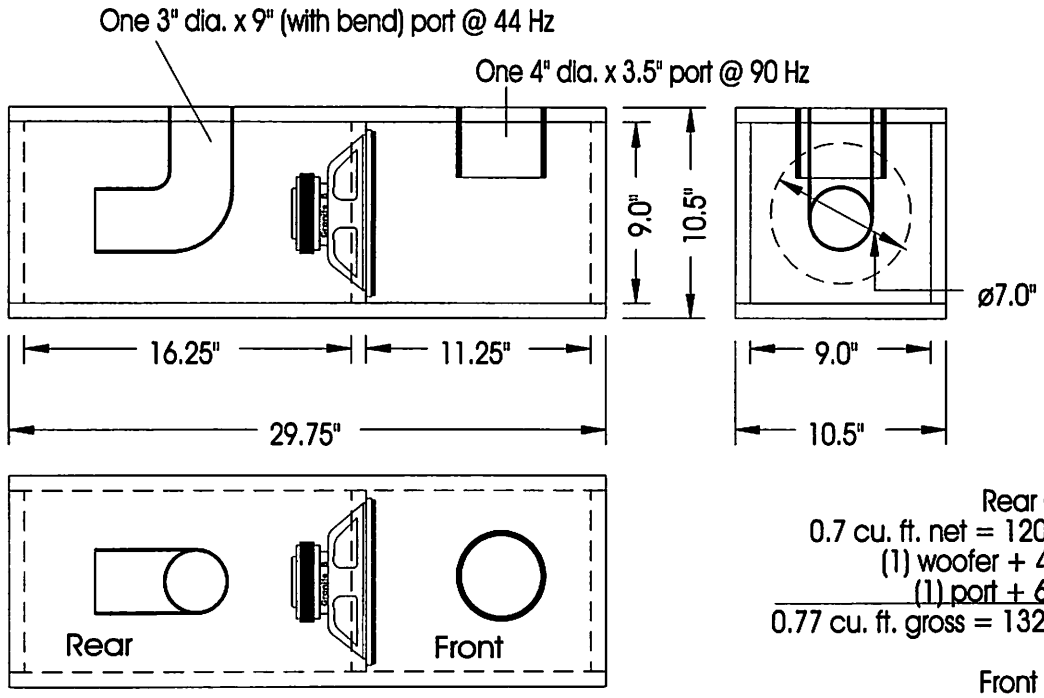

Rear Chamber:
0.7 cu. ft. net = 1209.6 cu. in.
(1) woofer + 45.0 cu. in.
(1) port + 68.4 cu. in.
0.77 cu. ft. gross = 1323.0 cu. in.

Front Chamber:
0.5 cu. ft. net = 864.0 cu. in.
(1) port + 43.7 cu. in.
0.53 cu. ft. gross = 907.7 cu. in.

NOTE: Line all walls with 1" fiberglass insulation or similar material!

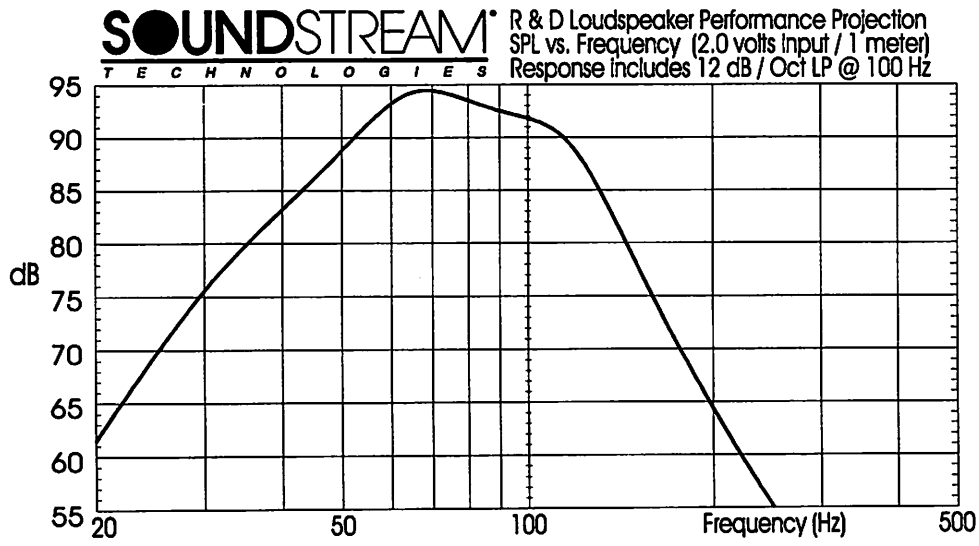

Application Notes:

CODE: G8EN5

SOUNDSTREAM®
TECHNOLOGIES

Woofer: Granite Pro 8
Enclosure Type: Vented Bandpass #29
Music Type: High output, wide response; good all around enclosure

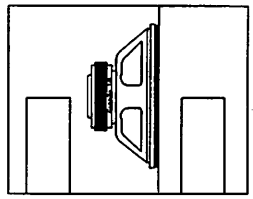
2.00 cu. ft. o.d.

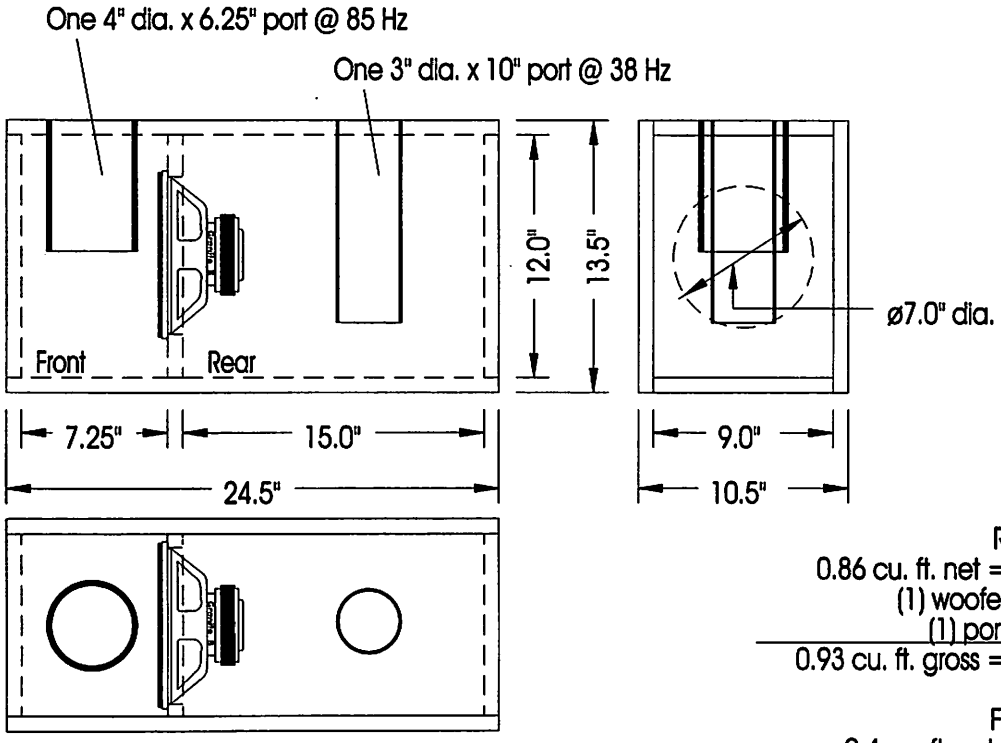

Rear Chamber:
0.86 cu. ft. net = 1486.1 cu. in.
(1) woofer + 45.0 cu. in.
(1) port + 76.7 cu. in.
0.93 cu. ft. gross = 1607.8 cu. in.

Front Chamber:
0.4 cu. ft. net = 691.2 cu. in.
(1) port + 87.5 cu. in.
0.45 cu. ft. gross = 778.7 cu. in.

NOTE: Line all walls with 1" fiberglass insulation or similar material!

SOUNDSTREAM® TECHNOLOGIES
R & D Loudspeaker Performance Projection
SPL vs. Frequency (2.0 volts input / 1 meter)
Response includes 12 dB / Oct LP @ 100 Hz

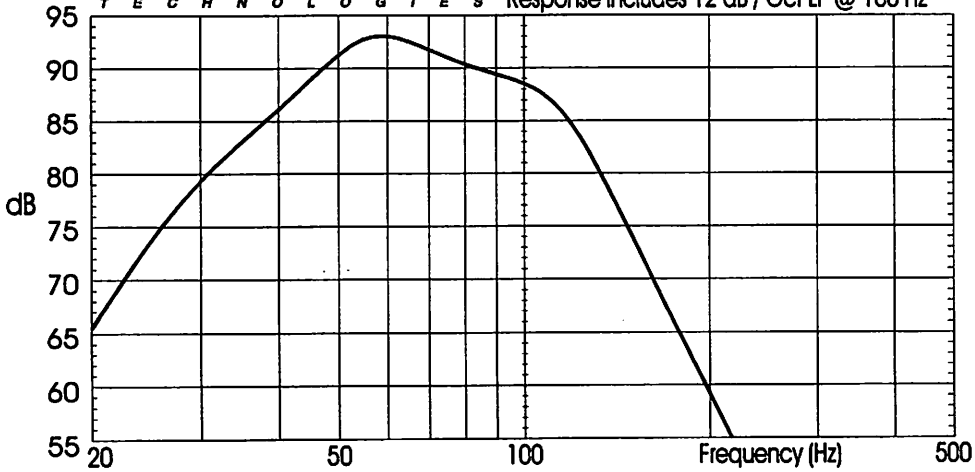

Application Notes:

- _____
- _____
- _____
- _____
- _____
- _____
- _____

CODE: G8EN6

SOUNDSTREAM®

TECHNOLOGIES

Woofer: Granite Pro 8
Enclosure Type: Sealed Bandpass #26
Music Type: Good output; good all around enclosure

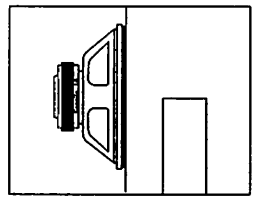

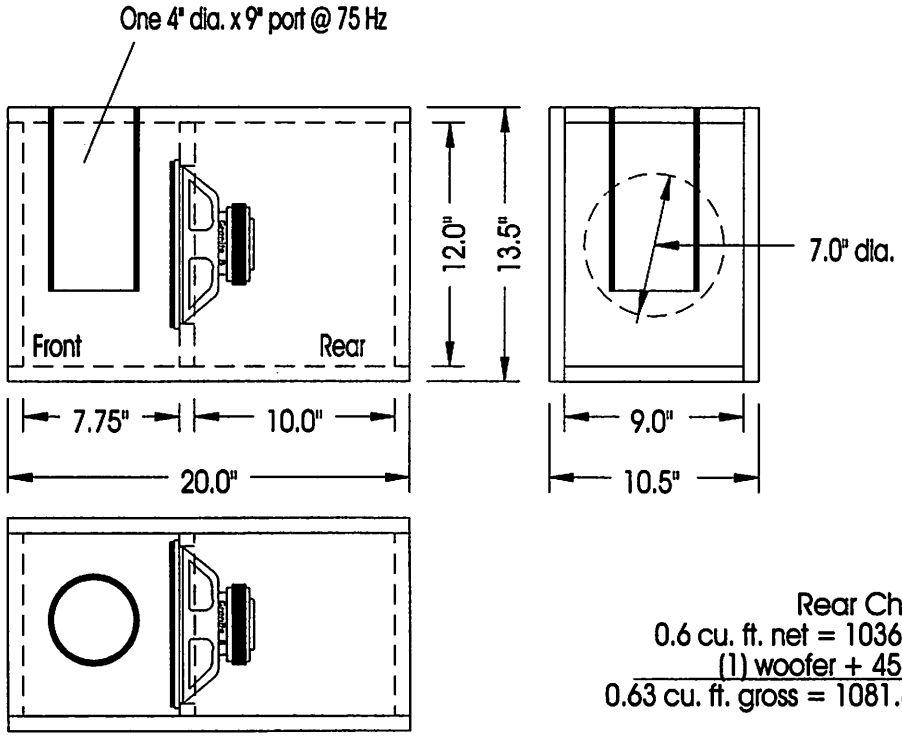

Rear Chamber:
0.6 cu. ft. net = 1036.8 cu. in.
(1) woofer + 45.0 cu. in.
0.63 cu. ft. gross = 1081.8 cu. in.

Front Chamber:
0.4 cu. ft. net = 691.2 cu. in.
(1) port + 131.2 cu. in.
0.48 cu. ft. gross = 822.4 cu. in.

NOTE: Line all walls with 1" fiberglass insulation or similar material!

SOUNDSTREAM® TECHNOLOGIES

R & D Loudspeaker Performance Projection
SPL vs. Frequency (2.0 volts input / 1 meter)
Response includes 12 dB / Oct LP @ 100 Hz

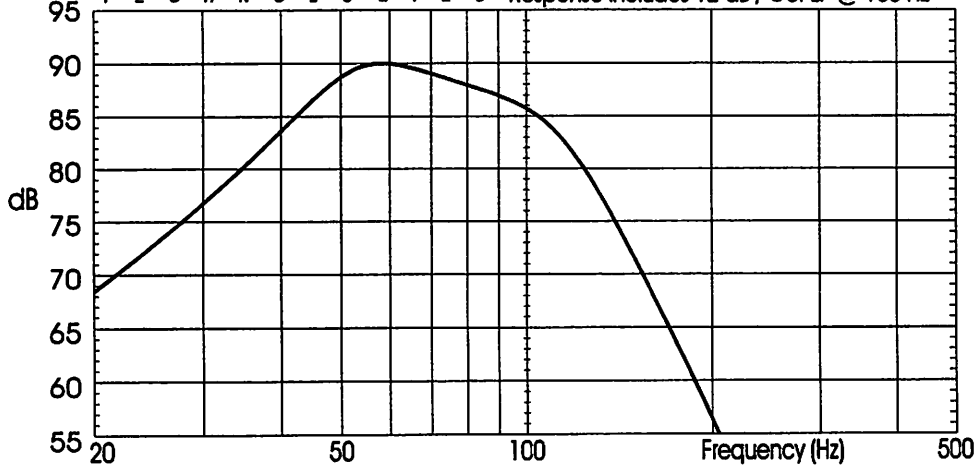

Application Notes:

- _____
- _____
- _____
- _____
- _____
- _____
- _____

CODE: G8EN7

SOUNDSTREAM®

TECHNOLOGIES

Woofer: Granite Pro 8
Enclosure Type: Sealed Bandpass #25 (Isobaric configuration)
Music Type: Very high output; very good for rap or rock

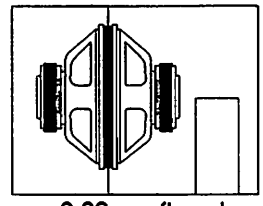

2.00 cu. ft. o.d.

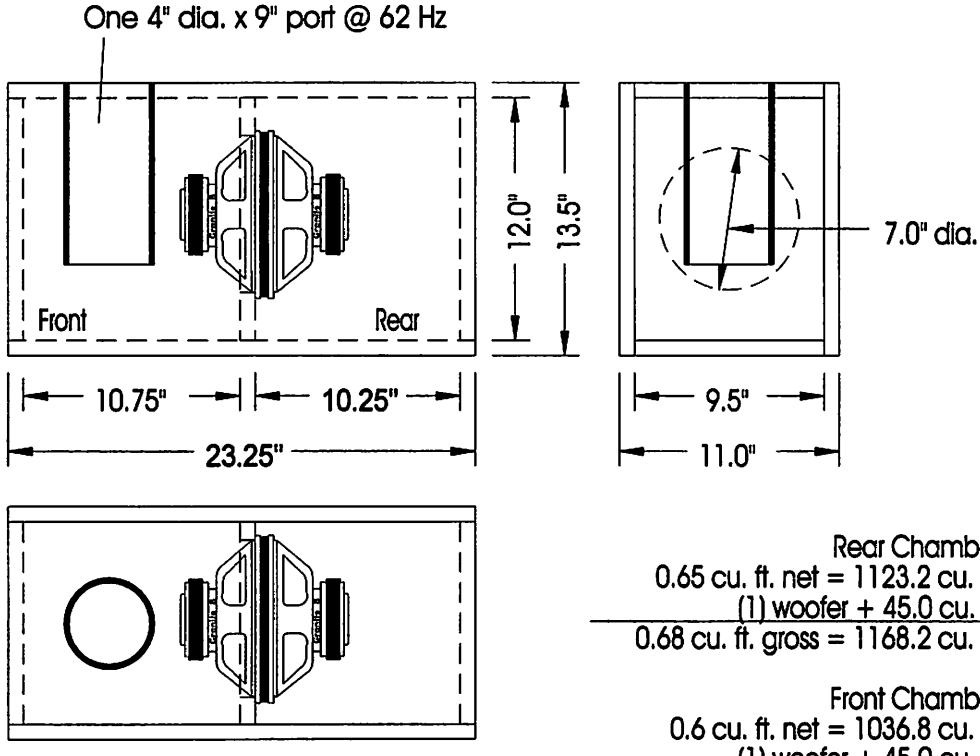

Rear Chamber:
0.65 cu. ft. net = 1123.2 cu. in.
(1) woofer + 45.0 cu. in.
0.68 cu. ft. gross = 1168.2 cu. in.

Front Chamber:
0.6 cu. ft. net = 1036.8 cu. in.
(1) woofer + 45.0 cu. in.
(1) port = 131.2 cu. in.
0.70 cu. ft. gross = 1213.0 cu. in.

NOTE: Line all walls with 1" fiberglass insulation or similar material!

SOUNDSTREAM® TECHNOLOGIES R & D Loudspeaker Performance Projection
SPL vs. Frequency (2.0 volts input / 1 meter)
Response includes 12 dB / Oct LP @ 100 Hz

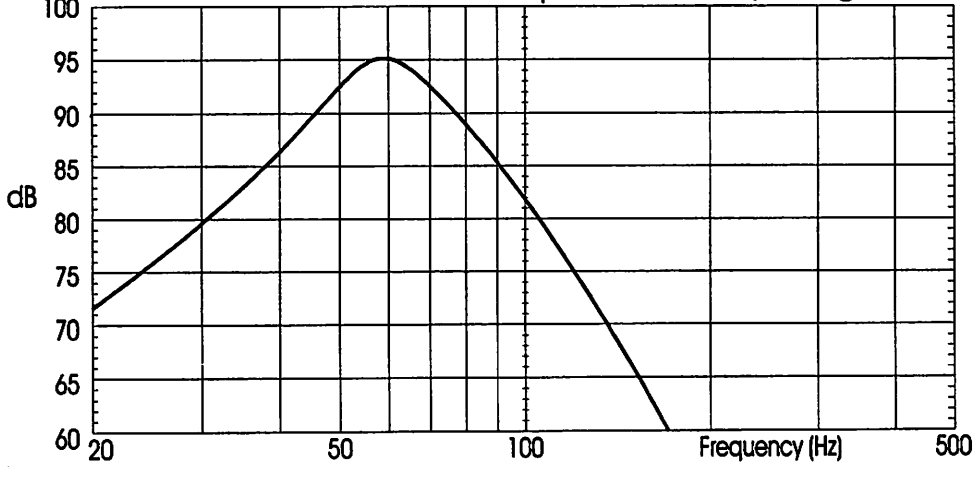

Application Notes:

- _____
- _____
- _____
- _____
- _____
- _____
- _____

CODE: G8EN8

SOUNDSTREAM®
TECHNOLOGIES

Woofer: Granite Pro 8
Enclosure Type: Sealed Bandpass #27
Music Type: High SPL; Rock or Rap

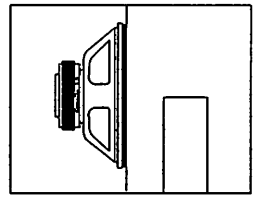
1.64 cu. ft. o.d.

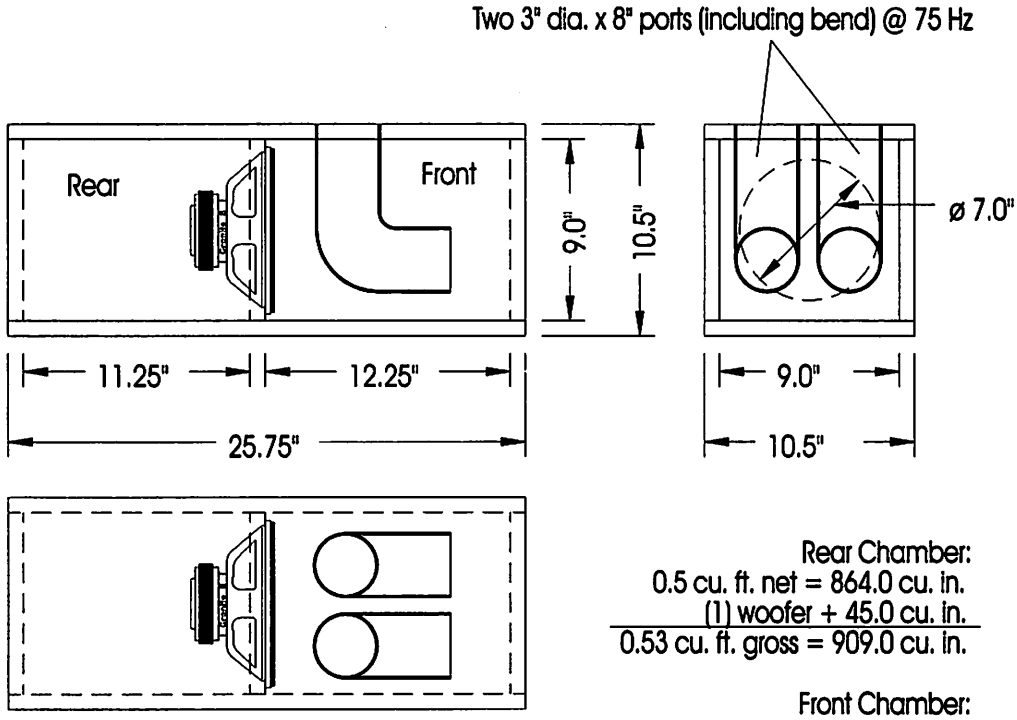

Rear Chamber:
0.5 cu. ft. net = 864.0 cu. in.
(1) woofer + 45.0 cu. in.
0.53 cu. ft. gross = 909.0 cu. in.

Front Chamber:
0.5 cu. ft. net = 864.0 cu. in.
(2) ports + 120.2 cu. in.
0.57 cu. ft. gross = 984.2 cu. in.

NOTE: Line all walls with 1" fiberglass insulation or similar material!

SOUNDSTREAM® TECHNOLOGIES
R & D Loudspeaker Performance Projection
SPL vs. Frequency (2.0 volts input / 1 meter)
Response includes 12 dB / Oct LP @ 100 Hz

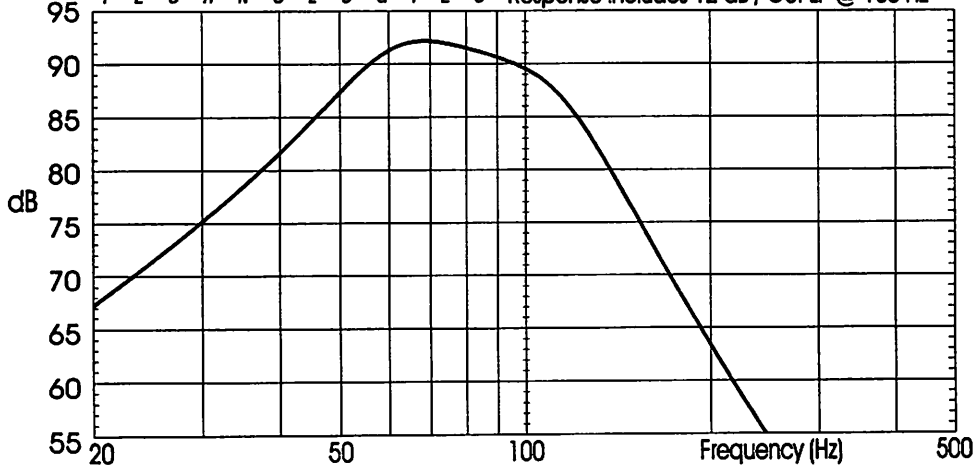

Application Notes:

- _____
- _____
- _____
- _____
- _____
- _____
- _____

CODE: G8EN9

SOUNDSTREAM®

TECHNOLOGIES

Woofer: Granite Pro 8
Enclosure Type: Vented Bandpass
Music Type: High output for Rap

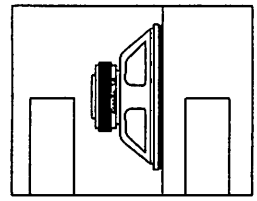

2.00 cu. ft. o.d.

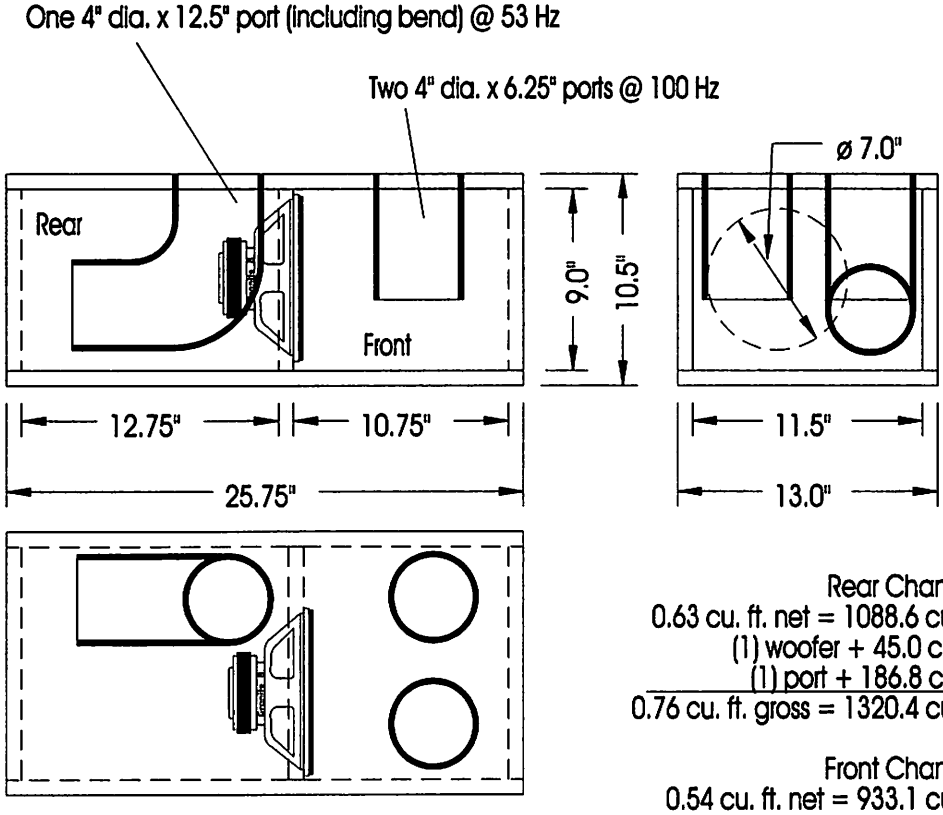

Rear Chamber:
0.63 cu. ft. net = 1088.6 cu. in.
(1) woofer + 45.0 cu. in.
(1) port + 186.8 cu. in.
0.76 cu. ft. gross = 1320.4 cu. in.

Front Chamber:
0.54 cu. ft. net = 933.1 cu. in.
(2) ports + 174.9 cu. in.
0.64 cu. ft. gross = 1108.0 cu. in.

NOTE: Line all walls with 1" fiberglass insulation or similar material!

SOUNDSTREAM® TECHNOLOGIES

R & D Loudspeaker Performance Projection
SPL vs. Frequency (2.0 volts input / 1 meter)
Response includes 12 dB / Oct LP @ 100 Hz

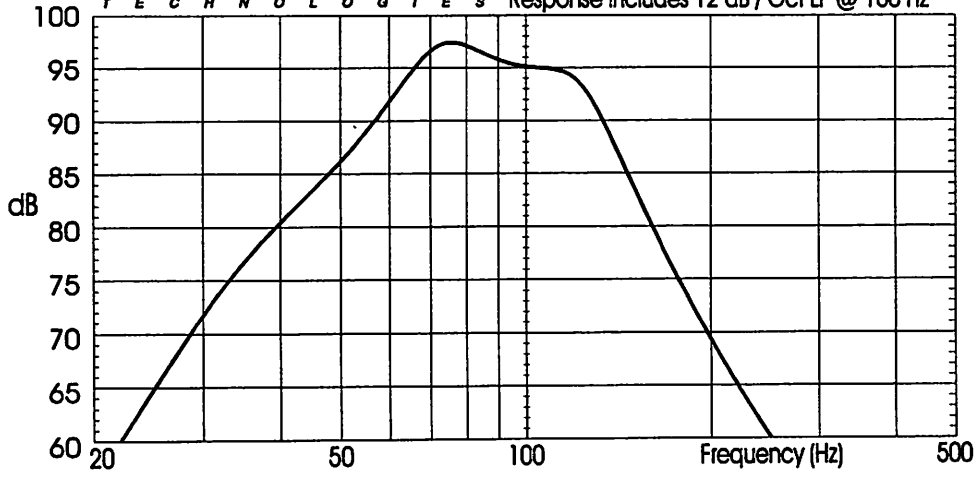

Application Notes:

CODE: G8EN10

SOUNDSTREAM®
TECHNOLOGIES

Woofer: Granite Pro 10
Enclosure Type: Sealed bandpass (4 woofer version of #1)
Music Type: High SPL; Rock or Rap

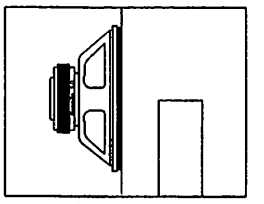
7.86 cu. ft. o.d.

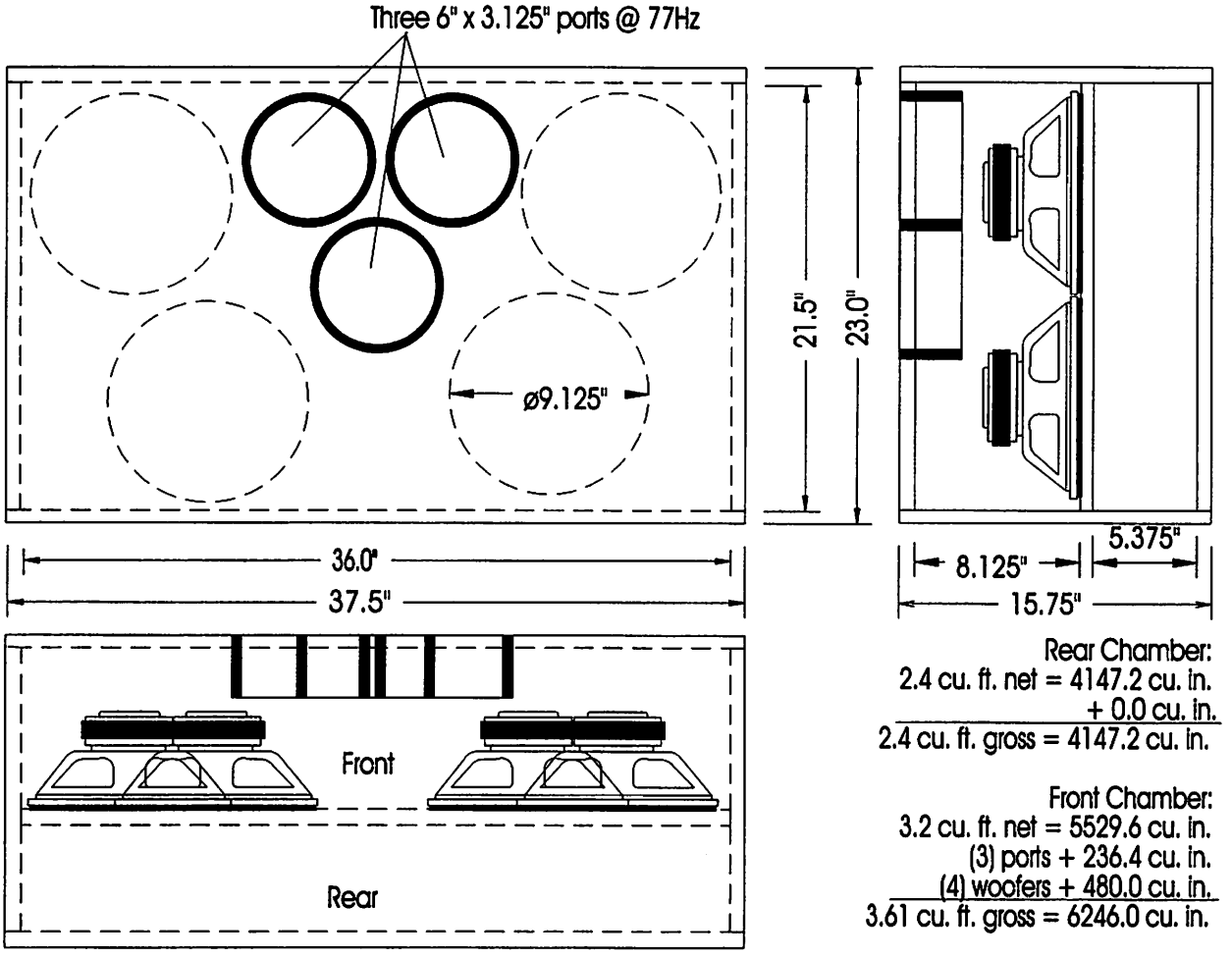

Rear Chamber:
2.4 cu. ft. net = 4147.2 cu. in.
+ 0.0 cu. in.
2.4 cu. ft. gross = 4147.2 cu. in.

Front Chamber:
3.2 cu. ft. net = 5529.6 cu. in.
(3) ports + 236.4 cu. in.
(4) woofers + 480.0 cu. in.
3.61 cu. ft. gross = 6246.0 cu. in.

NOTE: Line all walls with 1" fiberglass insulation or similar material!

SOUNDSTREAM® TECHNOLOGIES
R & D Loudspeaker Performance Projection
SPL vs. Frequency (2.0 volts input / 1 meter)
Response includes 12 dB / Oct LP @ 100 Hz

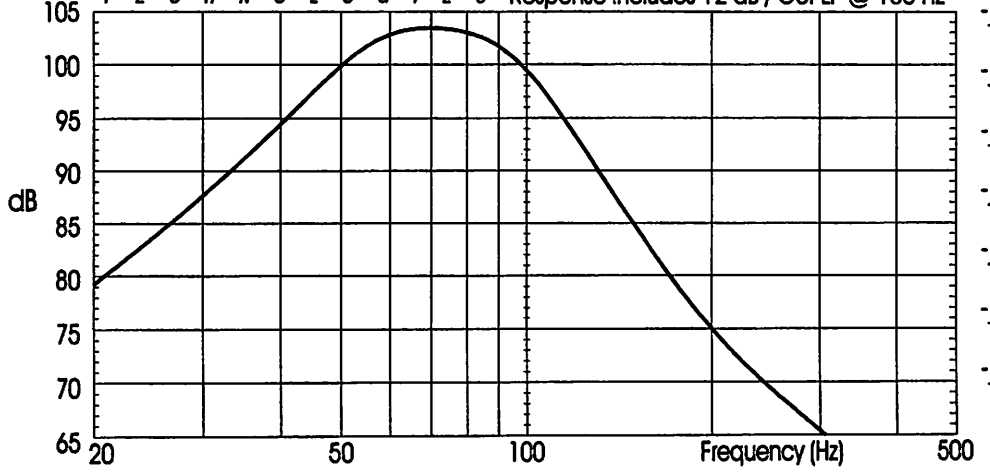

Application Notes:

- _____
- _____
- _____
- _____
- _____
- _____
- _____

CODE: G10EN1

SOUNDSTREAM®

TECHNOLOGIES

Woofer: Granite Pro 10
Enclosure Type: Sealed Bandpass #1
Music Type: High SPL; Rock or Rap

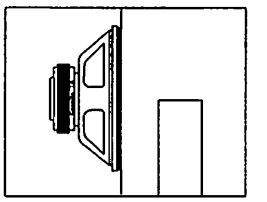

2.24 cu. ft. o.d.

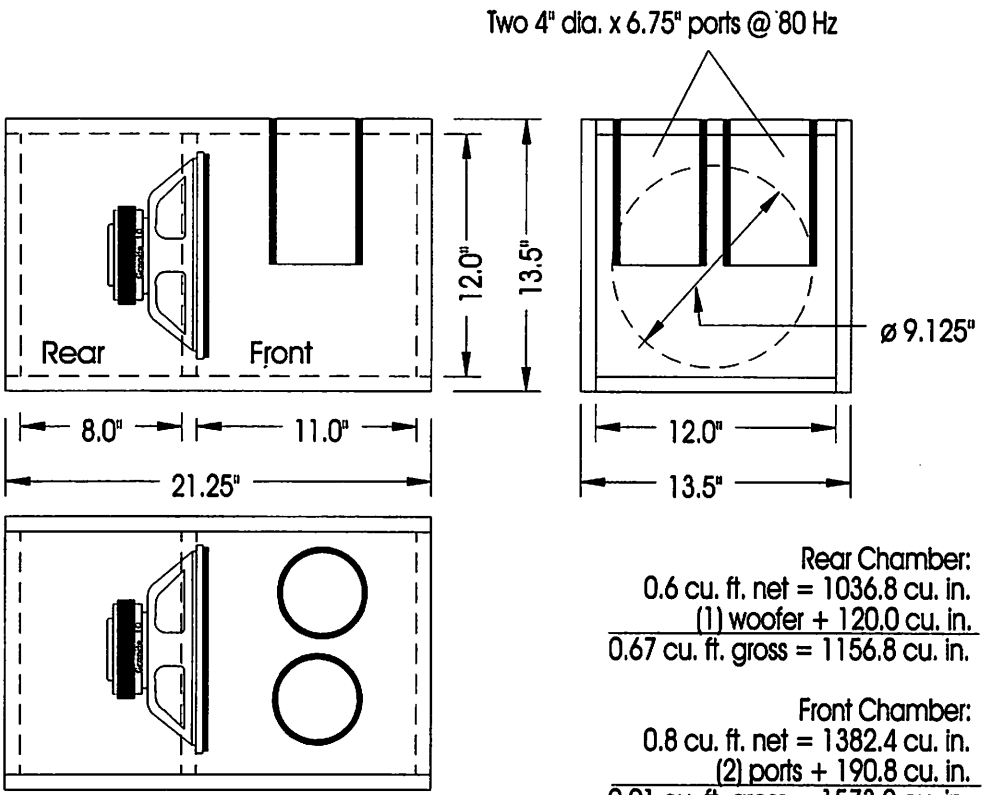

Rear Chamber:
0.6 cu. ft. net = 1036.8 cu. in.
(1) woofer + 120.0 cu. in.
0.67 cu. ft. gross = 1156.8 cu. in.

Front Chamber:
0.8 cu. ft. net = 1382.4 cu. in.
(2) ports + 190.8 cu. in.
0.91 cu. ft. gross = 1573.2 cu. in.

NOTE: Line all walls with 1" fiberglass insulation or similar material!

SOUNDSTREAM® TECHNOLOGIES

R & D Loudspeaker Performance Projection
SPL vs. Frequency (2.0 volts input / 1 meter)
Response includes 12 dB / Oct LP @ 100 Hz

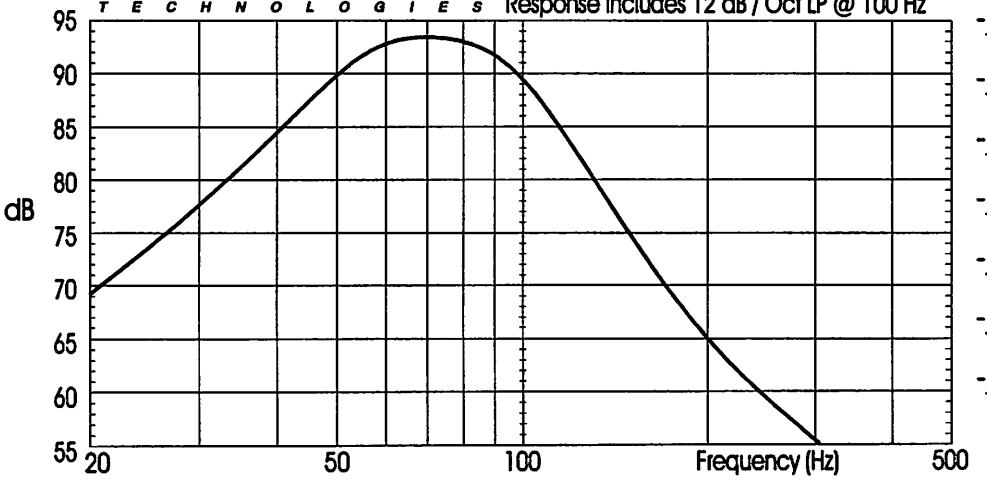

Application Notes:

- _____
- _____
- _____
- _____
- _____
- _____
- _____

CODE: G10EN2

SOUNDSTREAM®
TECHNOLOGIES

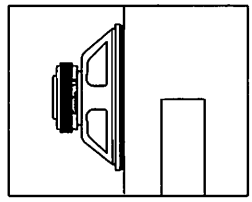
4.18 cu. ft. o.d.

Woofer: Granite Pro 10
Enclosure Type: Sealed Bandpass (2 woofer / 3 chamber version)
Music Type: High SPL; Rock or Rap

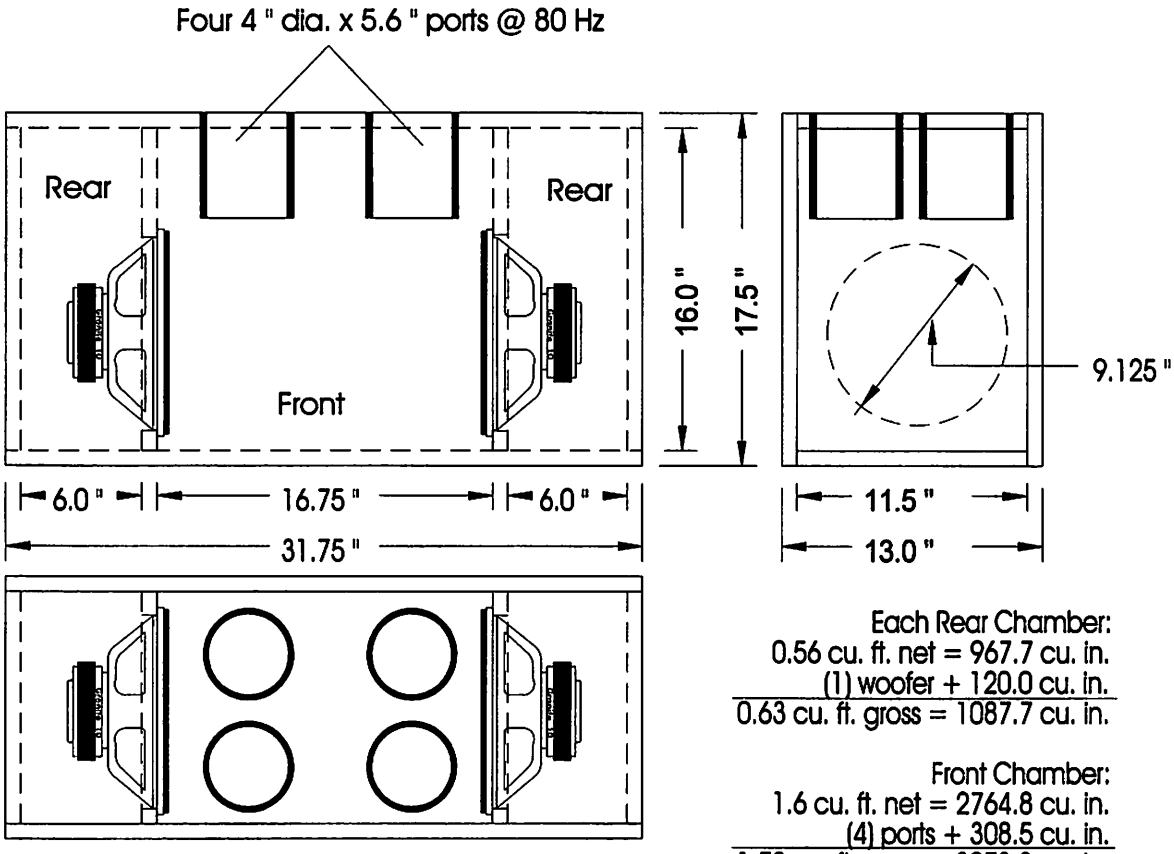

Each Rear Chamber:
0.56 cu. ft. net = 967.7 cu. in.
(1) woofer + 120.0 cu. in.
0.63 cu. ft. gross = 1087.7 cu. in.

Front Chamber:
1.6 cu. ft. net = 2764.8 cu. in.
(4) ports + 308.5 cu. in.
1.78 cu. ft. gross = 3073.3 cu. in.

NOTE: Line all walls with 1" fiberglass insulation or similar material!

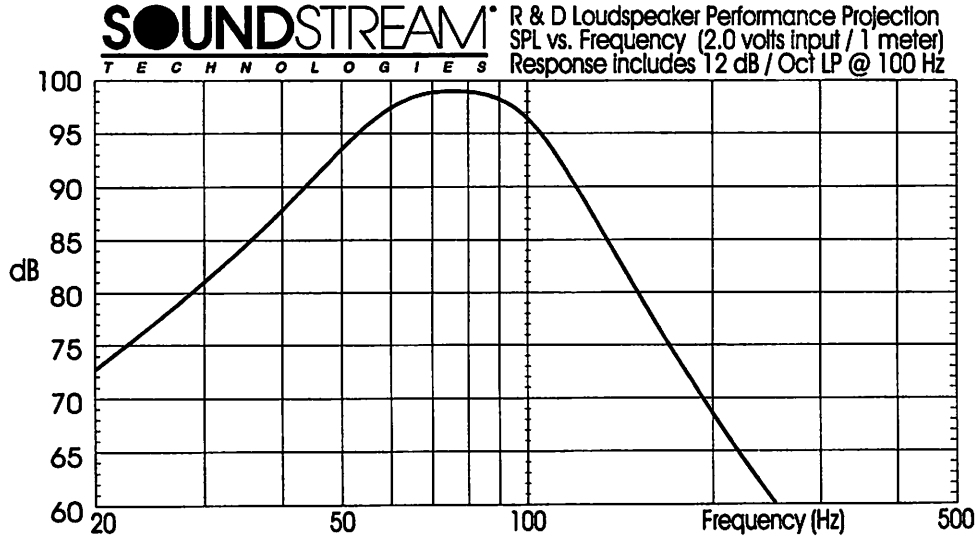

Application Notes:

- _____
- _____
- _____
- _____
- _____
- _____
- _____

CODE: G10EN3

SOUNDSTREAM®

TECHNOLOGIES

Woofer: Granite Pro 10
Enclosure Type: Sealed
Music Type: Good small enclosure; good for rock or rap

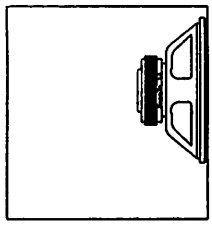

1.54 cu. ft. o.d.

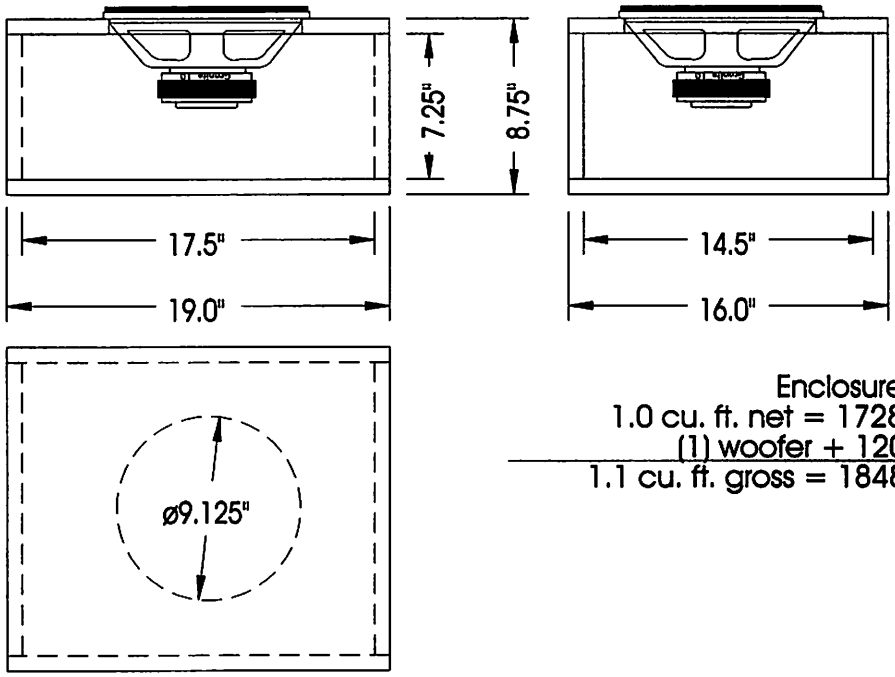

Enclosure Volume:
1.0 cu. ft. net = 1728.0 cu. in.
(1) woofer + 120.0 cu. in.
1.1 cu. ft. gross = 1848.0 cu. in.

NOTE: Line all walls with 1" fiberglass insulation or similar material!

SOUNDSTREAM® TECHNOLOGIES

R & D Loudspeaker Performance Projection
SPL vs. Frequency (2.0 volts input / 1 meter)
Response includes 12 dB / Oct LP @ 100 Hz

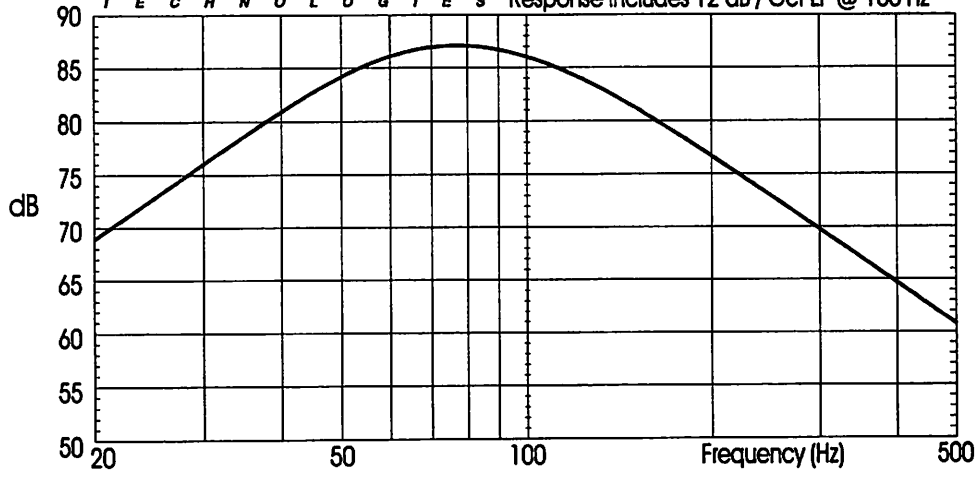

Application Notes:

- _____
- _____
- _____
- _____
- _____
- _____
- _____

CODE: G10EN4

SOUNDSTREAM®

TECHNOLOGIES

Woofer: Granite Pro 10
Enclosure Type: Sealed
Music Type: Very good for classical and jazz

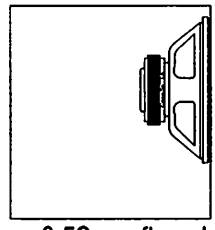

3.50 cu. ft. o.d.

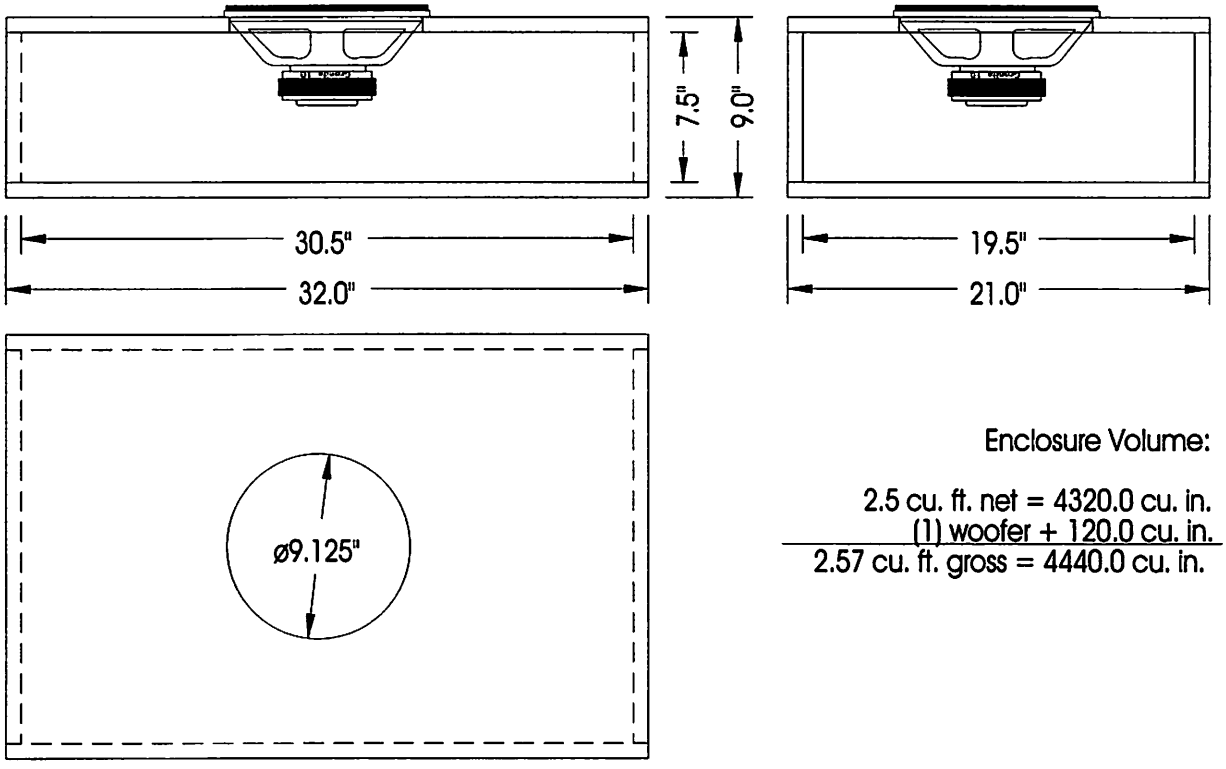

Enclosure Volume:

2.5 cu. ft. net = 4320.0 cu. in.
(1) woofer + 120.0 cu. in.
2.57 cu. ft. gross = 4440.0 cu. in.

NOTE: Line all walls with 1" fiberglass insulation or similar material!

SOUNDSTREAM® TECHNOLOGIES R & D Loudspeaker Performance Projection
SPL vs. Frequency (2.0 volts input / 1 meter)
Response includes 12 dB / Oct LP @ 100 Hz

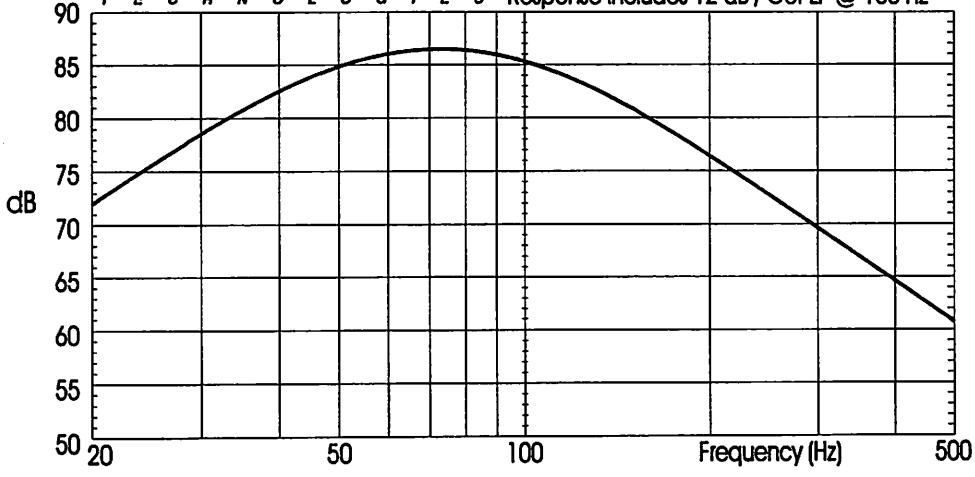

Application Notes:

-
-
-
-
-
-
-

CODE: G10EN5

SOUNDSTREAM®

TECHNOLOGIES

Woofer: Granite Pro 10
Enclosure Type: Vented
Music Type: Very good all around enclosure

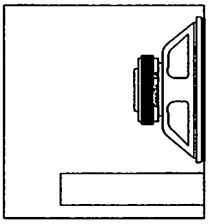

2.21 cu. ft. o.d.

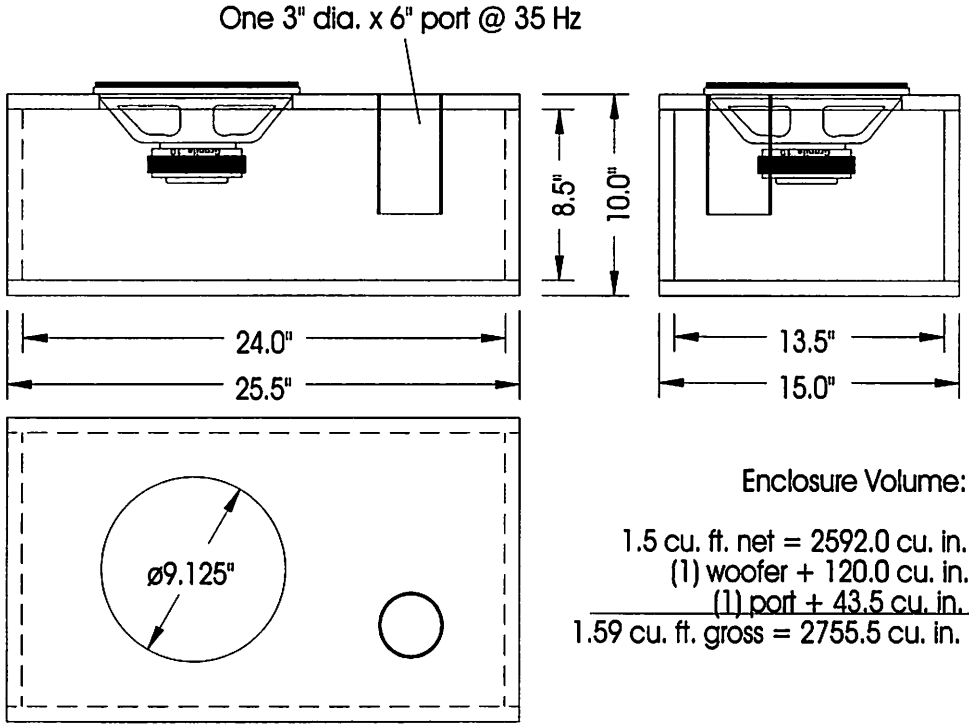

Enclosure Volume:

1.5 cu. ft. net = 2592.0 cu. in.
(1) woofer + 120.0 cu. in.
(1) port + 43.5 cu. in.
1.59 cu. ft. gross = 2755.5 cu. in.

NOTE: Line all walls with 1" fiberglass insulation or similar material!

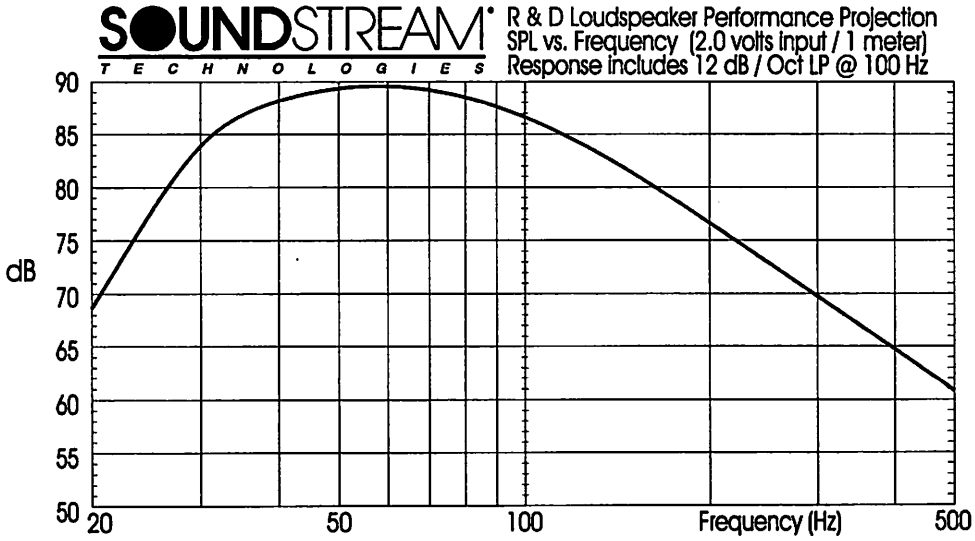

Application Notes:

CODE: G10EN6

SOUNDSTREAM®

TECHNOLOGIES

Woofer: Granite Pro 10
Enclosure Type: Vented
Music Type: Very good low frequency extension for classical and jazz

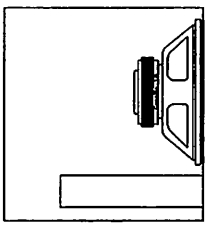

2.87 cu. ft. o.d.

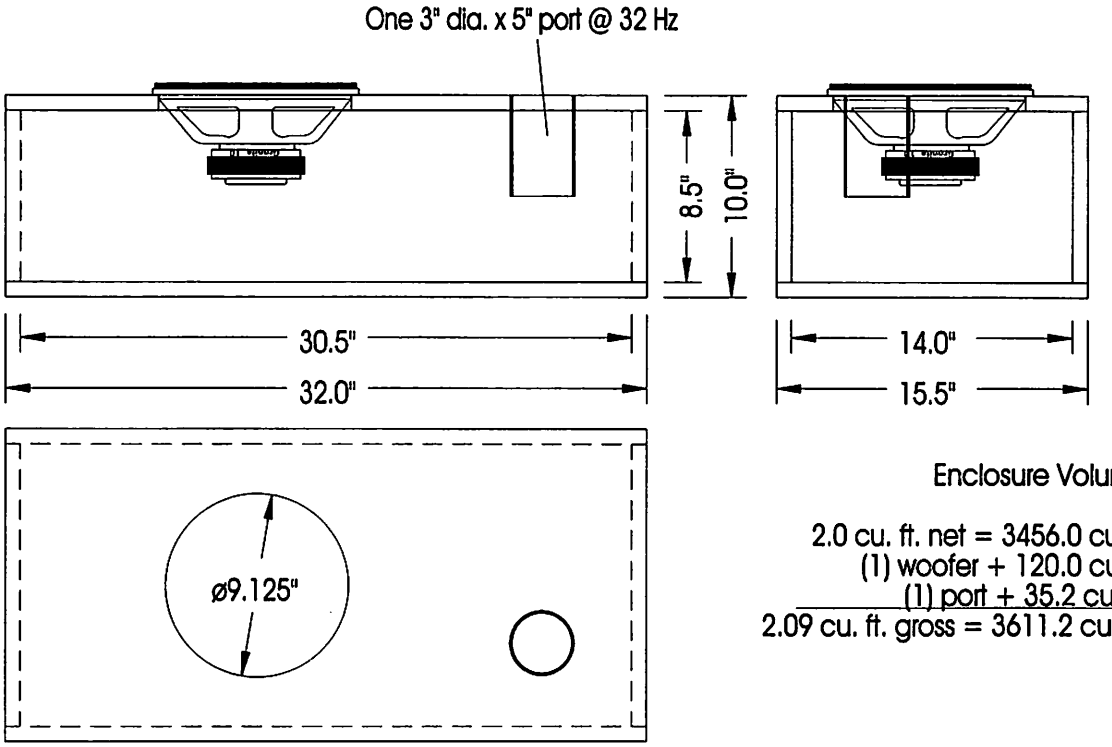

Enclosure Volume:

2.0 cu. ft. net = 3456.0 cu. in.
(1) woofer + 120.0 cu. in.
(1) port + 35.2 cu. in.
2.09 cu. ft. gross = 3611.2 cu. in.

NOTE: Line all walls with 1" fiberglass insulation or similar material!

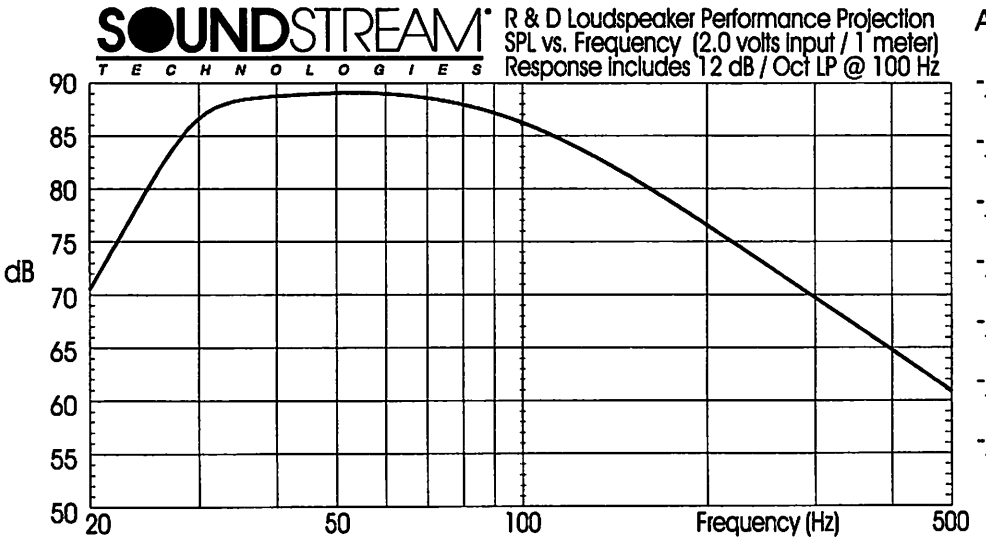

Application Notes:

CODE: G10EN7

SOUNDSTREAM®

TECHNOLOGIES

Woofer: Granite Pro 10
Enclosure Type: Vented Bandpass #4.1
Music Type: High SPL; Rock or Rap

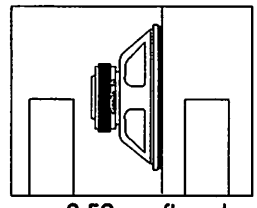

2.50 cu. ft. o.d.

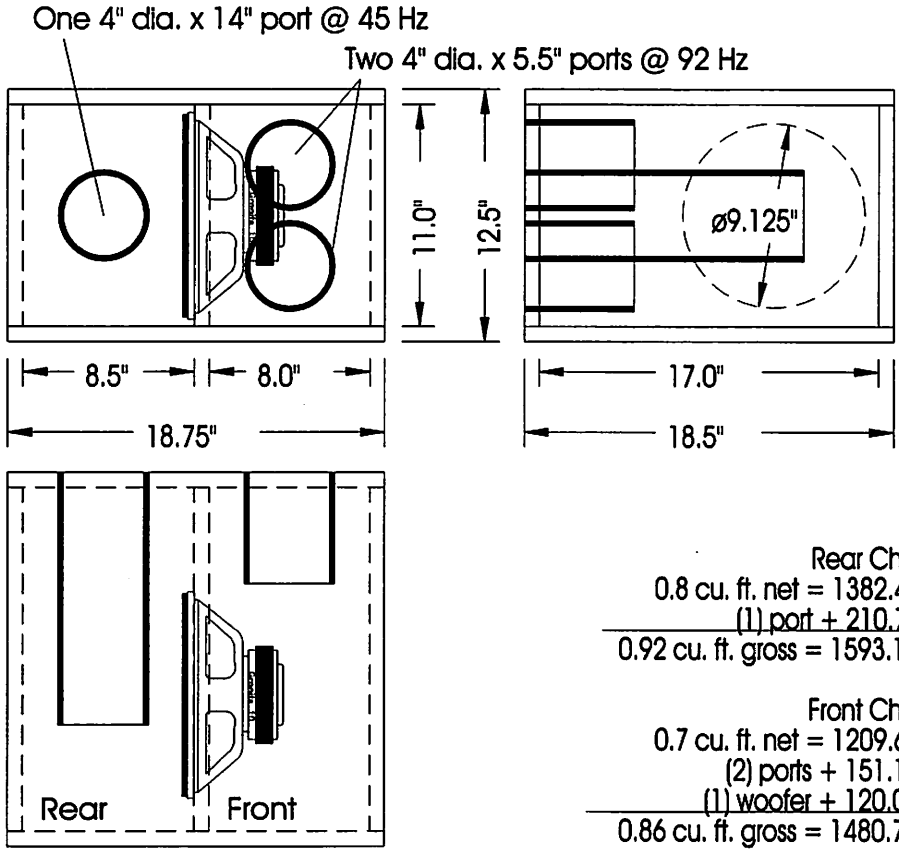

Rear Chamber:
0.8 cu. ft. net = 1382.4 cu. in.
(1) port + 210.7 cu. in.
0.92 cu. ft. gross = 1593.1 cu. in.

Front Chamber:
0.7 cu. ft. net = 1209.6 cu. in.
(2) ports + 151.1 cu. in.
(1) woofer + 120.0 cu. in.
0.86 cu. ft. gross = 1480.7 cu. in.

NOTE: Line all walls with 1" fiberglass insulation or similar material!

SOUNDSTREAM® TECHNOLOGIES

R & D Loudspeaker Performance Projection
SPL vs. Frequency (2.0 volts input / 1 meter)
Response includes 12 dB / Oct LP @ 100 Hz

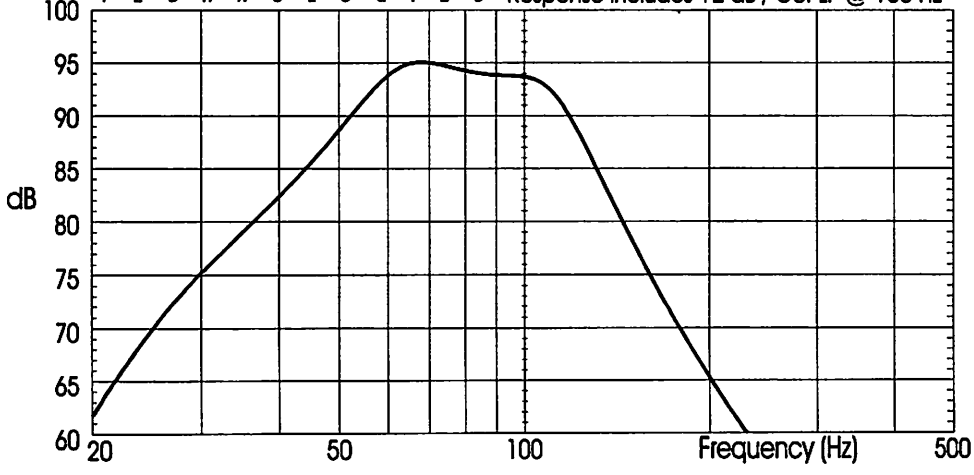

Application Notes:

- _____
- _____
- _____
- _____
- _____
- _____
- _____

CODE: G10EN8

SOUNDSTREAM®
TECHNOLOGIES

Woofer: Granite Pro 10
Enclosure Type: Sealed Bandpass
Music Type: Very good all around enclosure

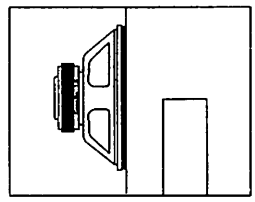

3.82 cu. ft. o.d.

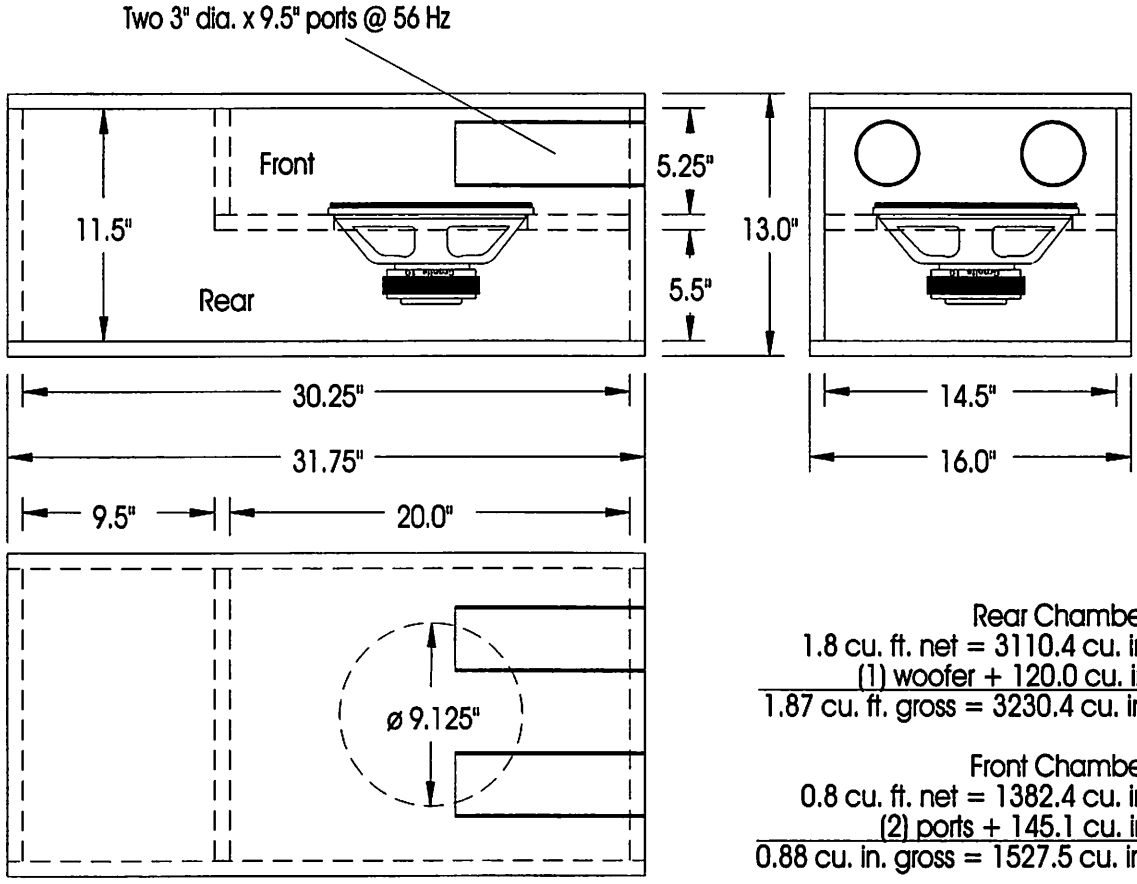

Rear Chamber:
1.8 cu. ft. net = 3110.4 cu. in.
(1) woofer + 120.0 cu. in.
1.87 cu. ft. gross = 3230.4 cu. in.

Front Chamber:
0.8 cu. ft. net = 1382.4 cu. in.
(2) ports + 145.1 cu. in.
0.88 cu. in. gross = 1527.5 cu. in.

NOTE: Line all walls with 1" fiberglass insulation or similar material!

SOUNDSTREAM® TECHNOLOGIES
R & D Loudspeaker Performance Projection
SPL vs. Frequency (2.0 volts input / 1 meter)
Response includes 12 dB / Oct LP @ 100 Hz

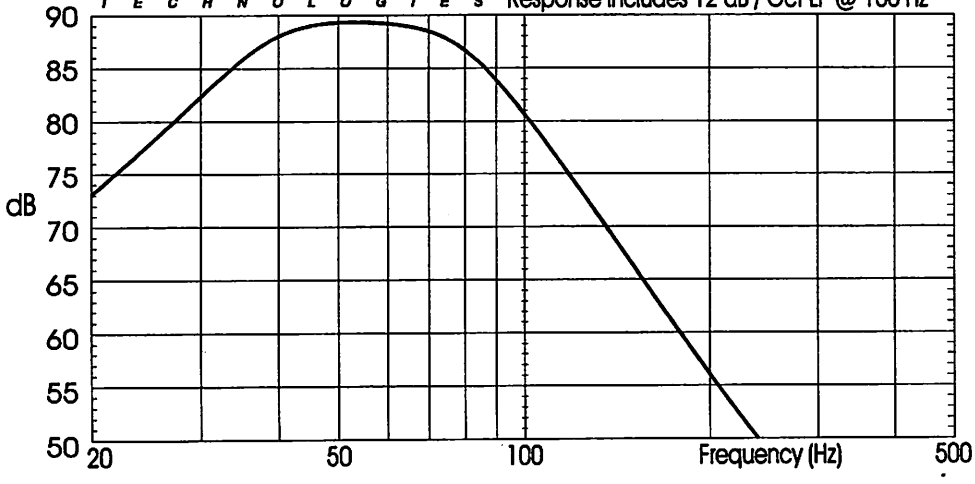

Application Notes:

CODE: G10EN9

SOUNDSTREAM®

TECHNOLOGIES

Woofer: Granite Pro 10
Enclosure Type: Vented Bandpass
Music Type: High SPL; Rock or Rap

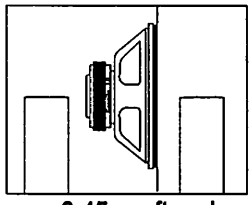

3.45 cu. ft. o.d.

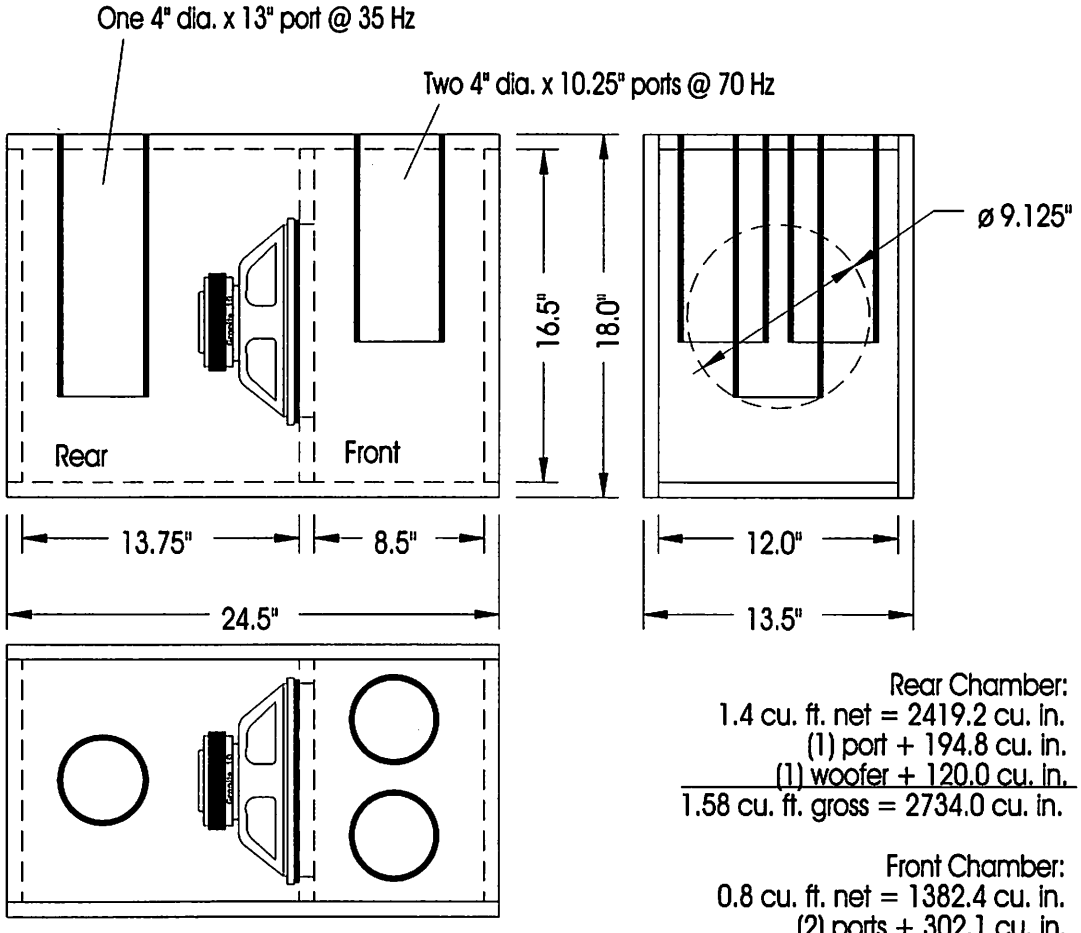

NOTE: Line all walls with 1" fiberglass insulation or similar material!

Rear Chamber:
1.4 cu. ft. net = 2419.2 cu. in.
(1) port + 194.8 cu. in.
(1) woofer + 120.0 cu. in.
1.58 cu. ft. gross = 2734.0 cu. in.

Front Chamber:
0.8 cu. ft. net = 1382.4 cu. in.
(2) ports + 302.1 cu. in.
0.97 cu. ft. gross = 1684.5 cu. in.

SOUNDSTREAM® TECHNOLOGIES

R & D Loudspeaker Performance Projection
SPL vs. Frequency (2.0 volts input / 1 meter)
Response includes 12 dB / Oct LP @ 100 Hz

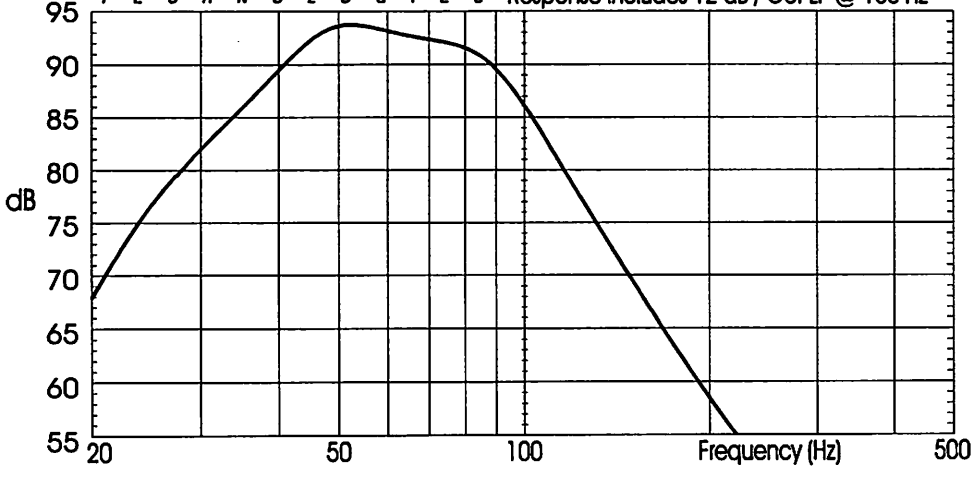

Application Notes:

CODE: G10EN10

SOUNDSTREAM®
TECHNOLOGIES

Woofer: Granite Pro 12
Enclosure Type: Sealed Bandpass (2 woofer / 3 chamber version)
Music Type: High SPL; Rock or Rap

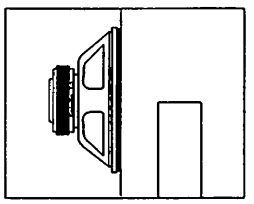

7.77 cu. ft. o.d.

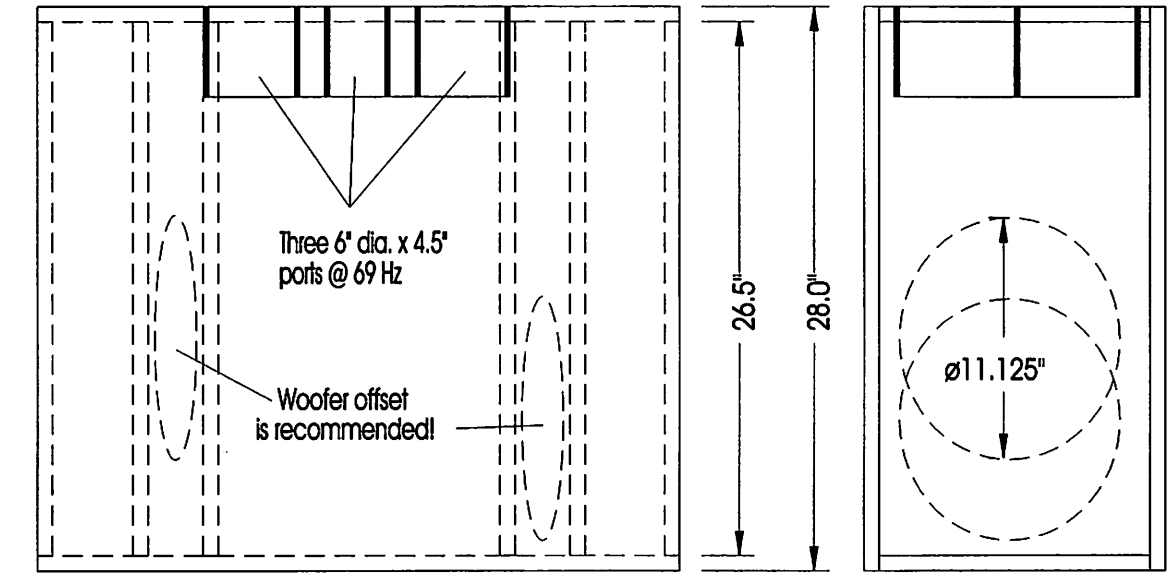

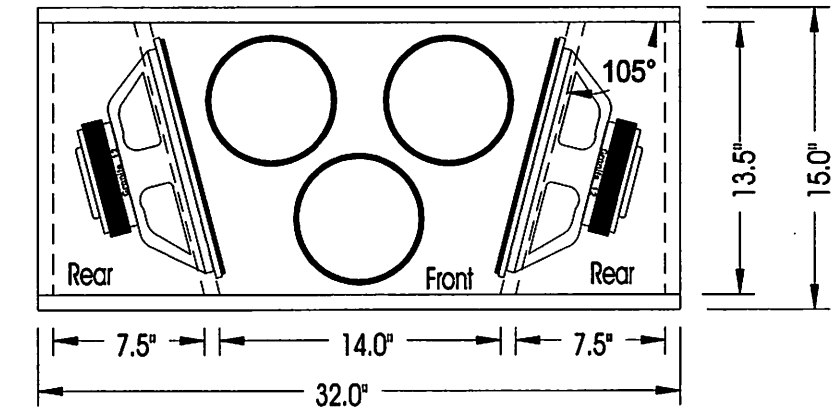

Each Rear Chamber:
1.1 cu. ft. net = 1900.8 cu. in.
(1) woofer + 135.0 cu. in.
1.18 cu. ft. gross = 2035.8 cu. in.

Front Chamber:
3.4 cu. ft. net = 5875.2 cu. in.
(3) ports + 373.3 cu. in.
3.62 cu. ft. gross = 6248.5 cu. in.

NOTE: Line all walls with 1" fiberglass insulation or similar material!

SOUNDSTREAM® TECHNOLOGIES
R & D Loudspeaker Performance Projection
SPL vs. Frequency (2.0 volts input / 1 meter)
Response includes 12 dB / Oct LP @ 100 Hz

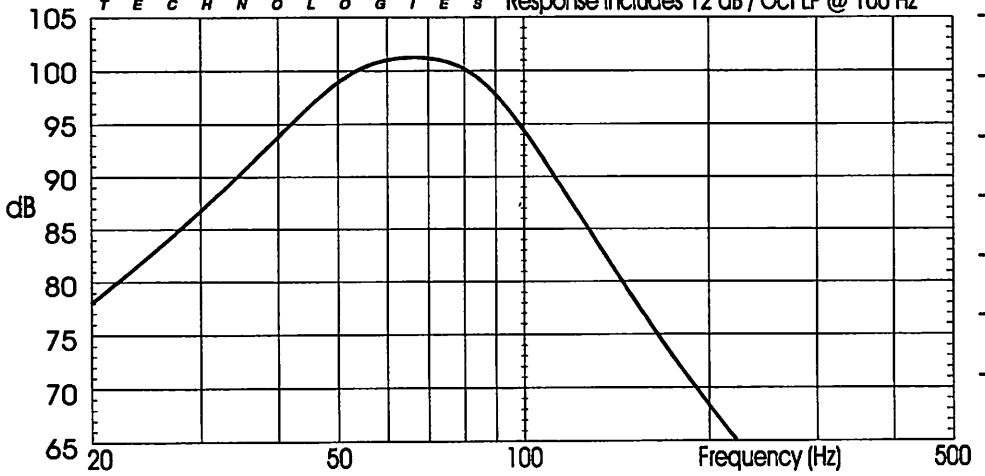

Application Notes:

- _____
- _____
- _____
- _____
- _____
- _____
- _____

CODE: G12EN1

SOUNDSTREAM®

TECHNOLOGIES

Woofer: Granite Pro 12
Enclosure Type: Sealed (Q = 0.7)
Music Type: Very good for jazz & classical, good for rock

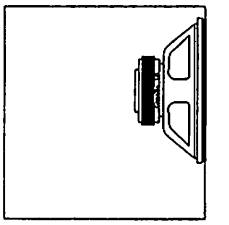

4.00 cu. ft. o.d.

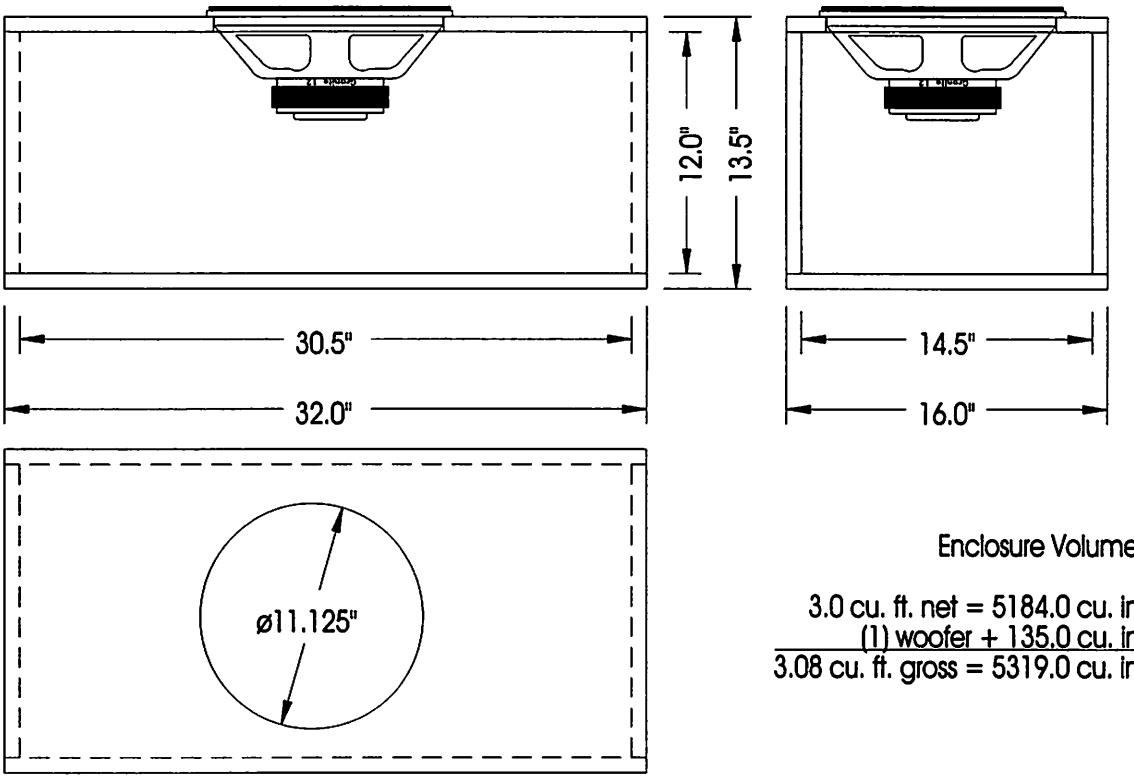

Enclosure Volume:

3.0 cu. ft. net = 5184.0 cu. in.
(1) woofer + 135.0 cu. in.
3.08 cu. ft. gross = 5319.0 cu. in.

NOTE: Line all walls with 1" fiberglass insulation or similar material!

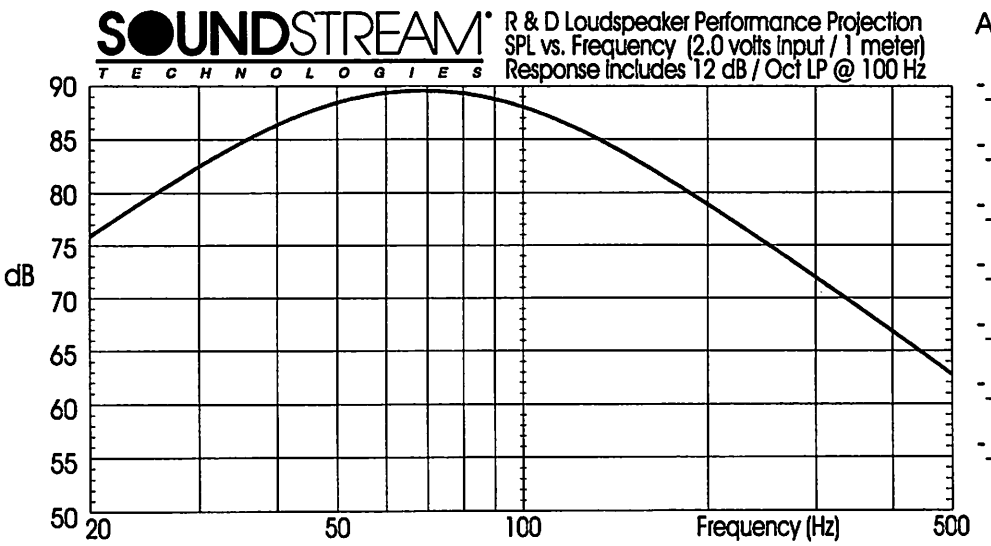

Application Notes:

-
-
-
-
-
-
-

CODE: G12EN2

SOUNDSTREAM®
TECHNOLOGIES

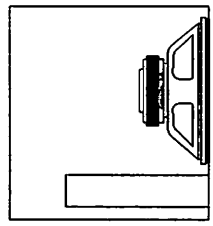
3.55 cu. ft. o.d.

Woofer: Granite Pro 12
Enclosure Type: Vented
Music Type: Good for jazz & classical, very good for rock, good for rap

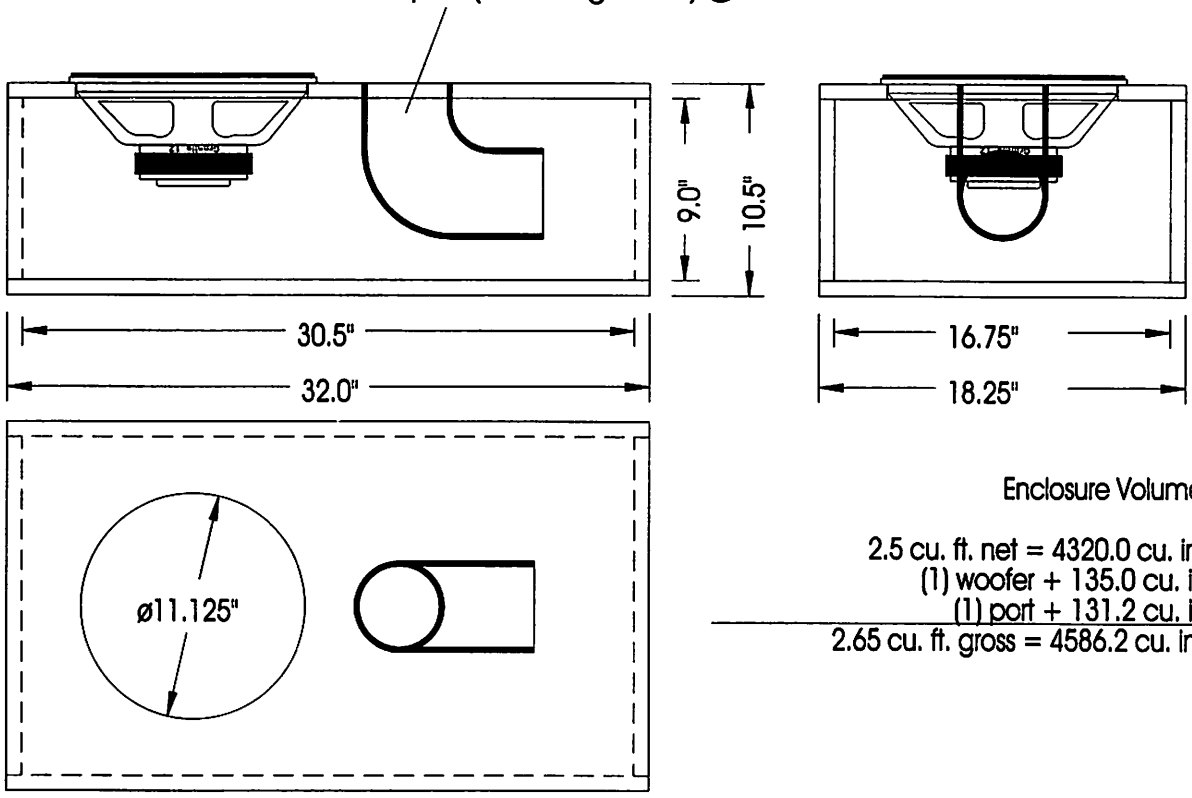

Enclosure Volume:

2.5 cu. ft. net = 4320.0 cu. in.
(1) woofer + 135.0 cu. in.
(1) port + 131.2 cu. in.
2.65 cu. ft. gross = 4586.2 cu. in.

NOTE: Line all walls with 1" fiberglass insulation or similar material!

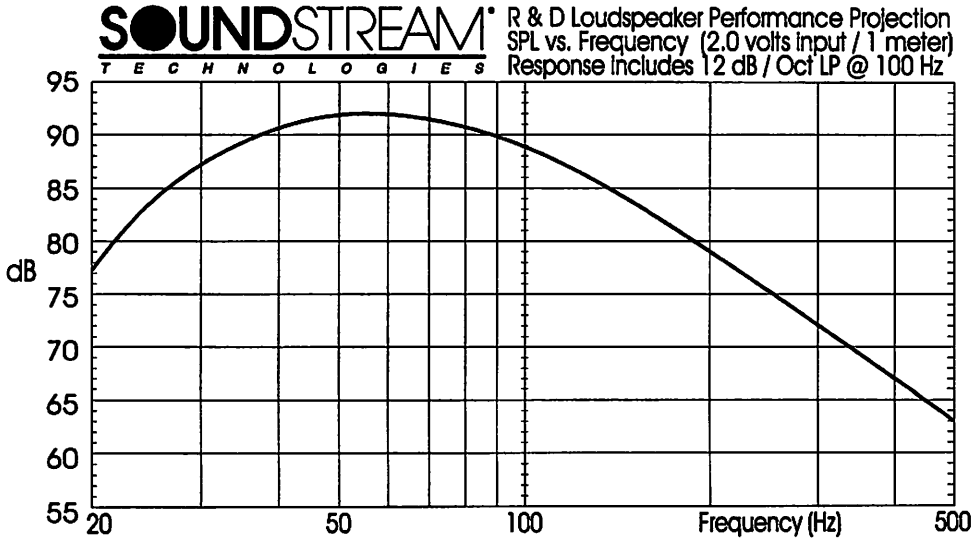

Application Notes:

CODE: G12EN3

SOUNDSTREAM®

TECHNOLOGIES

Woofer: Granite Pro 12
Enclosure Type: Vented Bandpass #10
Music Type: Very high output, very good for rap

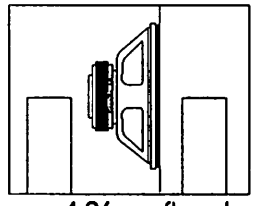

4.96 cu. ft. o.d.

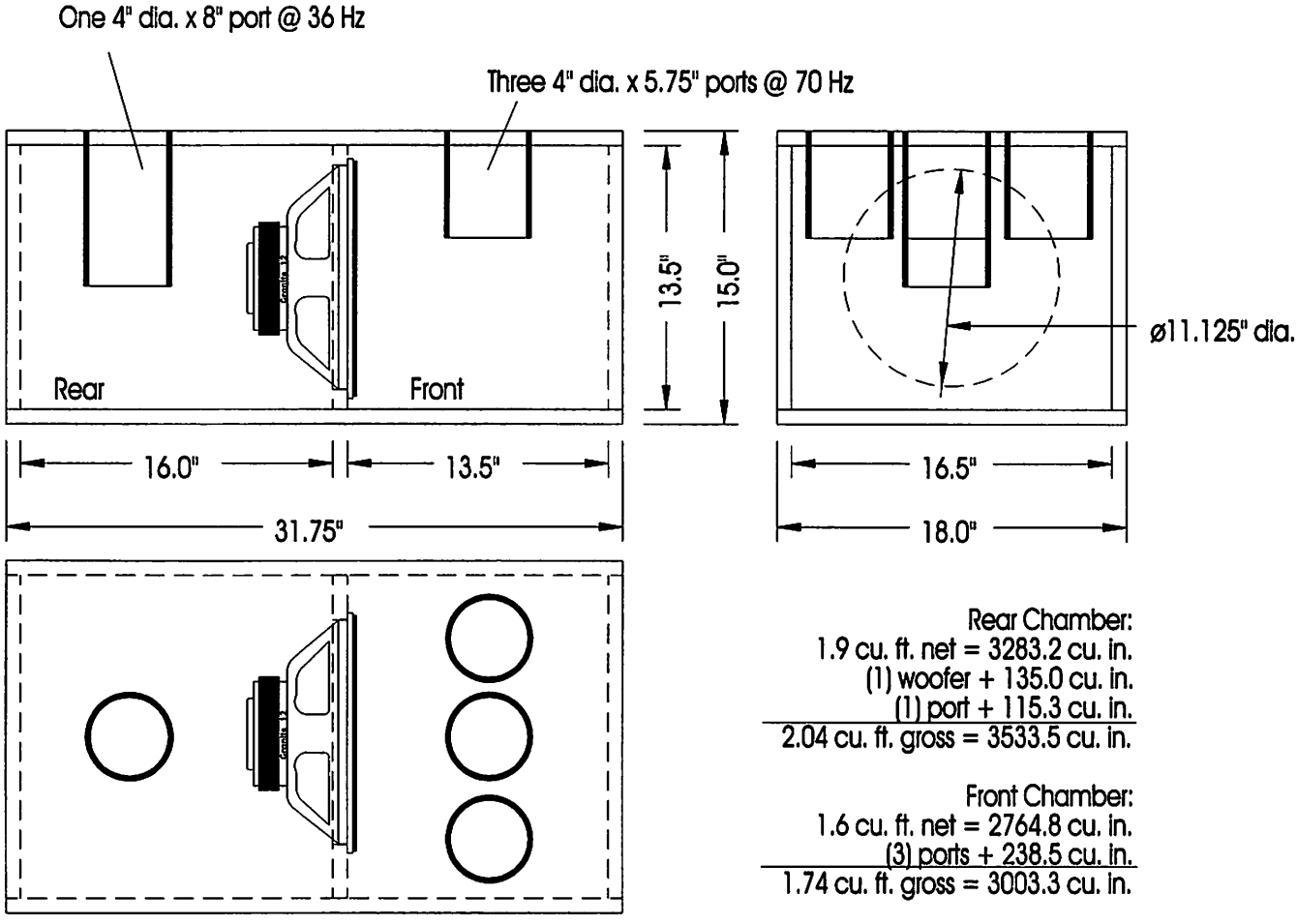

Rear Chamber:
1.9 cu. ft. net = 3283.2 cu. in.
(1) woofer + 135.0 cu. in.
(1) port + 115.3 cu. in.
2.04 cu. ft. gross = 3533.5 cu. in.

Front Chamber:
1.6 cu. ft. net = 2764.8 cu. in.
(3) ports + 238.5 cu. in.
1.74 cu. ft. gross = 3003.3 cu. in.

NOTE: Line all walls with 1" fiberglass insulation or similar material!

SOUNDSTREAM® TECHNOLOGIES

R & D Loudspeaker Performance Projection
SPL vs. Frequency (2.0 volts input / 1 meter)
Response includes 12 dB / Oct LP @ 100 Hz

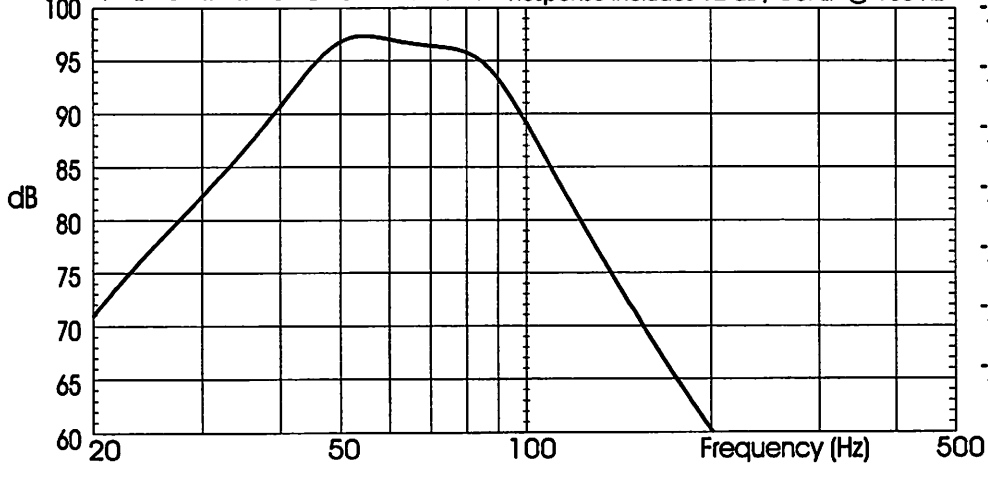

Application Notes:

-
-
-
-
-
-
-

CODE: G12EN4

SOUNDSTREAM®
TECHNOLOGIES

Woofer: Granite Pro 12
Enclosure Type: Vented Bandpass #11 (Isobaric configuration)
Music Type: Medium high output with good bass extension

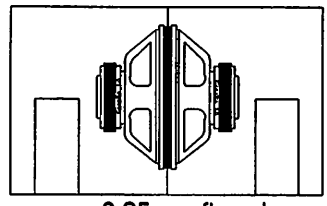
2.95 cu. ft. o.d.

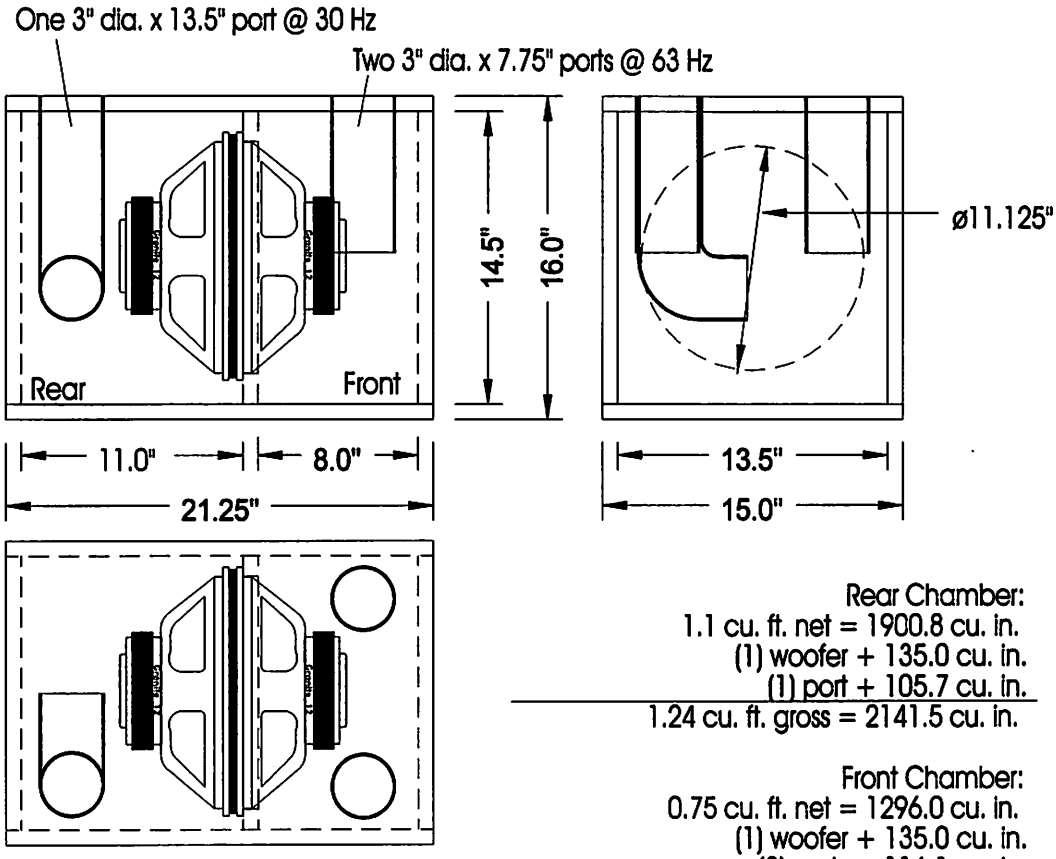

Rear Chamber:
1.1 cu. ft. net = 1900.8 cu. in.
(1) woofer + 135.0 cu. in.
(1) port + 105.7 cu. in.
1.24 cu. ft. gross = 2141.5 cu. in.

Front Chamber:
0.75 cu. ft. net = 1296.0 cu. in.
(1) woofer + 135.0 cu. in.
(2) ports + 116.1 cu. in.
0.90 cu. ft. gross = 1547.1 cu. in.

NOTE: Line all walls with 1" fiberglass insulation or similar material!

SOUNDSTREAM® TECHNOLOGIES
R & D Loudspeaker Performance Projection
SPL vs. Frequency (2.0 volts input / 1 meter)
Response includes 12 dB / Oct LP @ 100 Hz

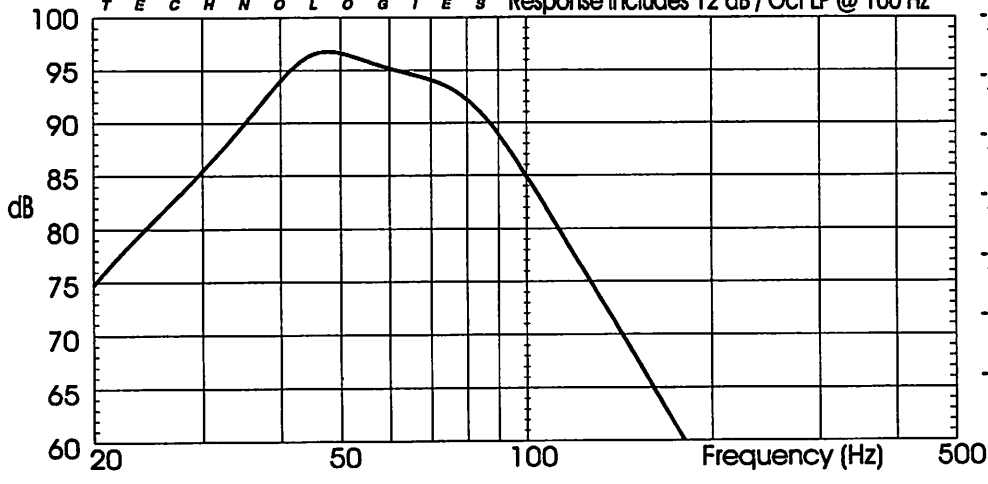

Application Notes:

- _____
- _____
- _____
- _____
- _____
- _____
- _____

CODE: G12EN5

SOUNDSTREAM®
TECHNOLOGIES

Woofer: Granite Pro 12
Enclosure Type: Sealed Bandpass #7
Music Type: High SPL, good for rock & rap

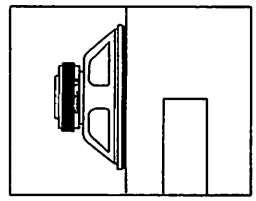

4.21 cu. ft. o.d.

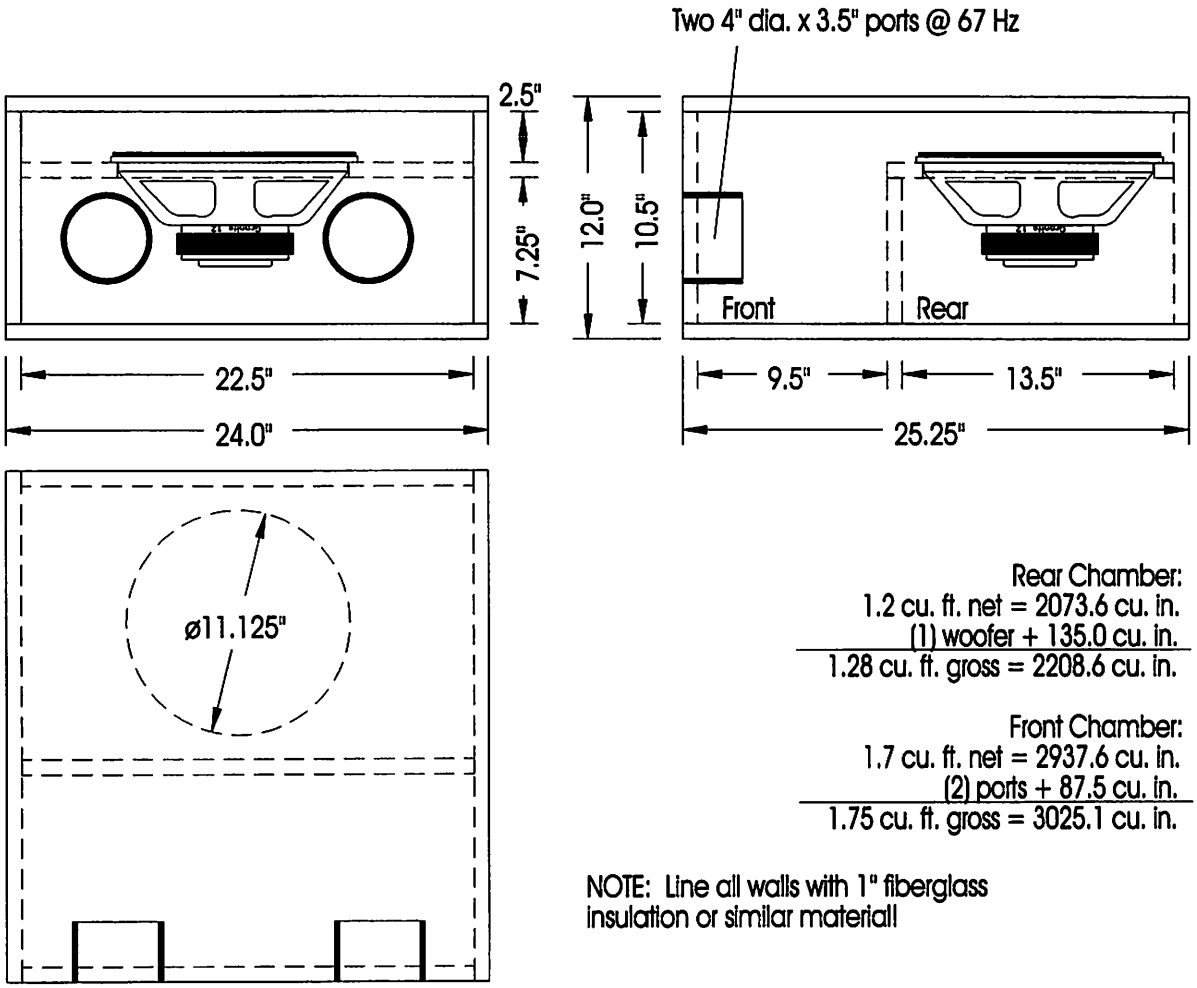

Rear Chamber:
1.2 cu. ft. net = 2073.6 cu. in.
(1) woofer + 135.0 cu. in.
1.28 cu. ft. gross = 2208.6 cu. in.

Front Chamber:
1.7 cu. ft. net = 2937.6 cu. in.
(2) ports + 87.5 cu. in.
1.75 cu. ft. gross = 3025.1 cu. in.

NOTE: Line all walls with 1" fiberglass insulation or similar material!

SOUNDSTREAM® TECHNOLOGIES
R & D Loudspeaker Performance Projection
SPL vs. Frequency (2.0 volts input / 1 meter)
Response includes 12 dB / Oct LP @ 100 Hz

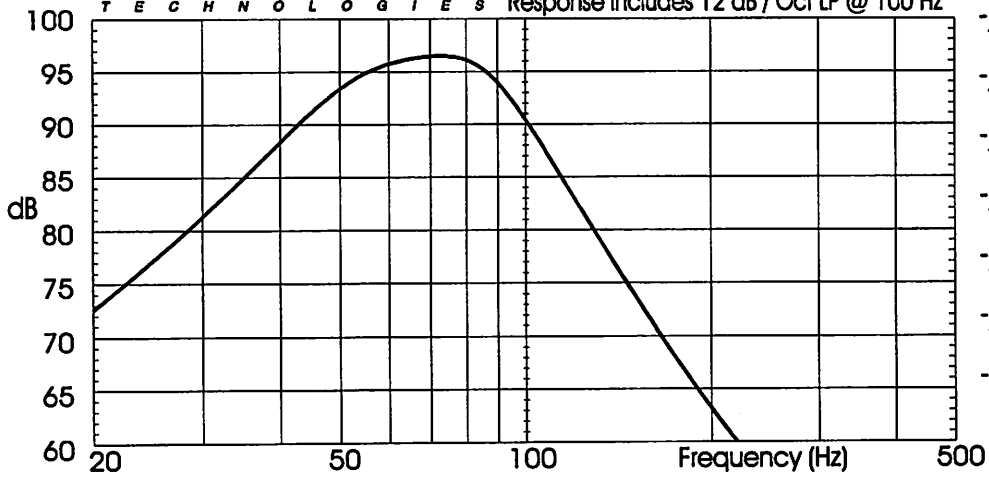

Application Notes:

CODE: G12EN6

SOUNDSTREAM®

TECHNOLOGIES

Woofer: Granite Pro 12
Enclosure Type: Sealed Bandpass (2 woofer / 3 chamber version)
Music Type: High SPL; Rock or Rap

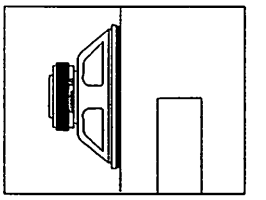

8.53 cu. ft. o.d.

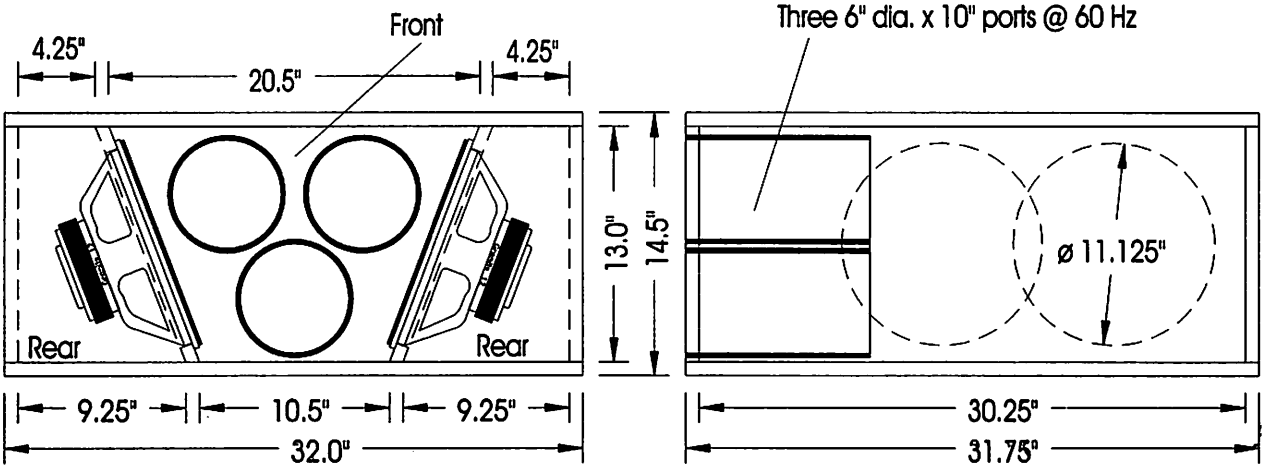

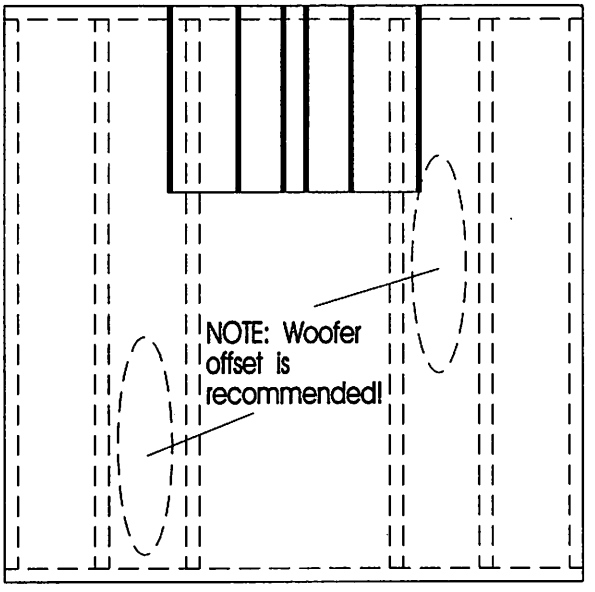

Each Rear Chamber:
1.5 cu. ft. net = 2592.0 cu. in.
(1) woofer + 135.0 cu. in.
1.58 cu. ft. gross = 2727.0 cu. in.

Front Chamber:
3.0 cu. ft. net = 5184.0 cu. in.
(3) ports + 920.7 cu. in.
3.53 cu. ft. gross = 6104.7 cu. in.

NOTE: Line all walls with 1" fiberglass insulation or similar material!

SOUNDSTREAM® TECHNOLOGIES

R & D Loudspeaker Performance Projection
SPL vs. Frequency (2.0 volts input / 1 meter)
Response includes 12 dB / Oct LP @ 100 Hz

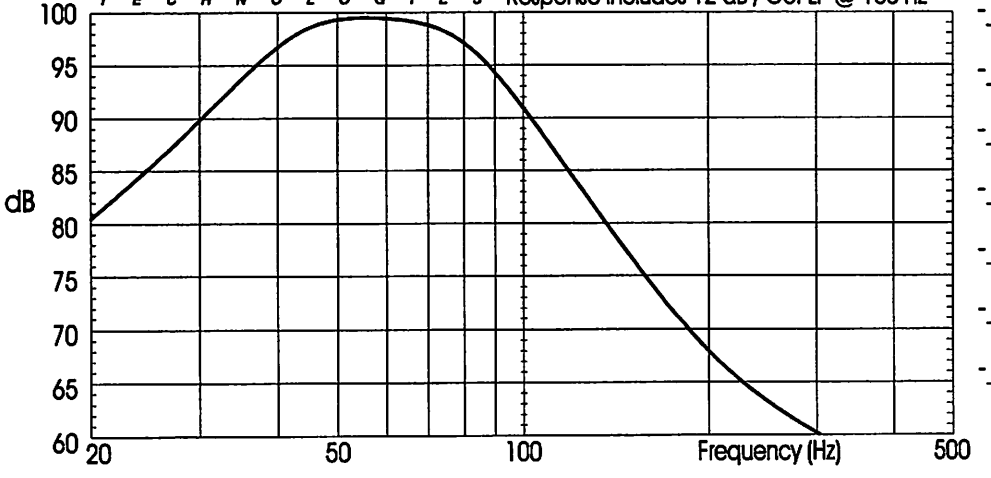

Application Notes:

- _____
- _____
- _____
- _____
- _____
- _____
- _____

CODE: G12EN7

SOUNDSTREAM®
TECHNOLOGIES

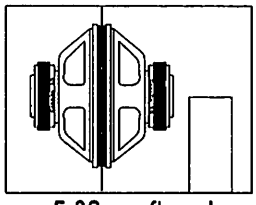
5.38 cu. ft. o.d.

Woofer: Granite Pro 12
Enclosure Type: Isobaric Sealed Bandpass (3 chamber / 4 woofer version)
Music Type: High SPL; Rock or Rap

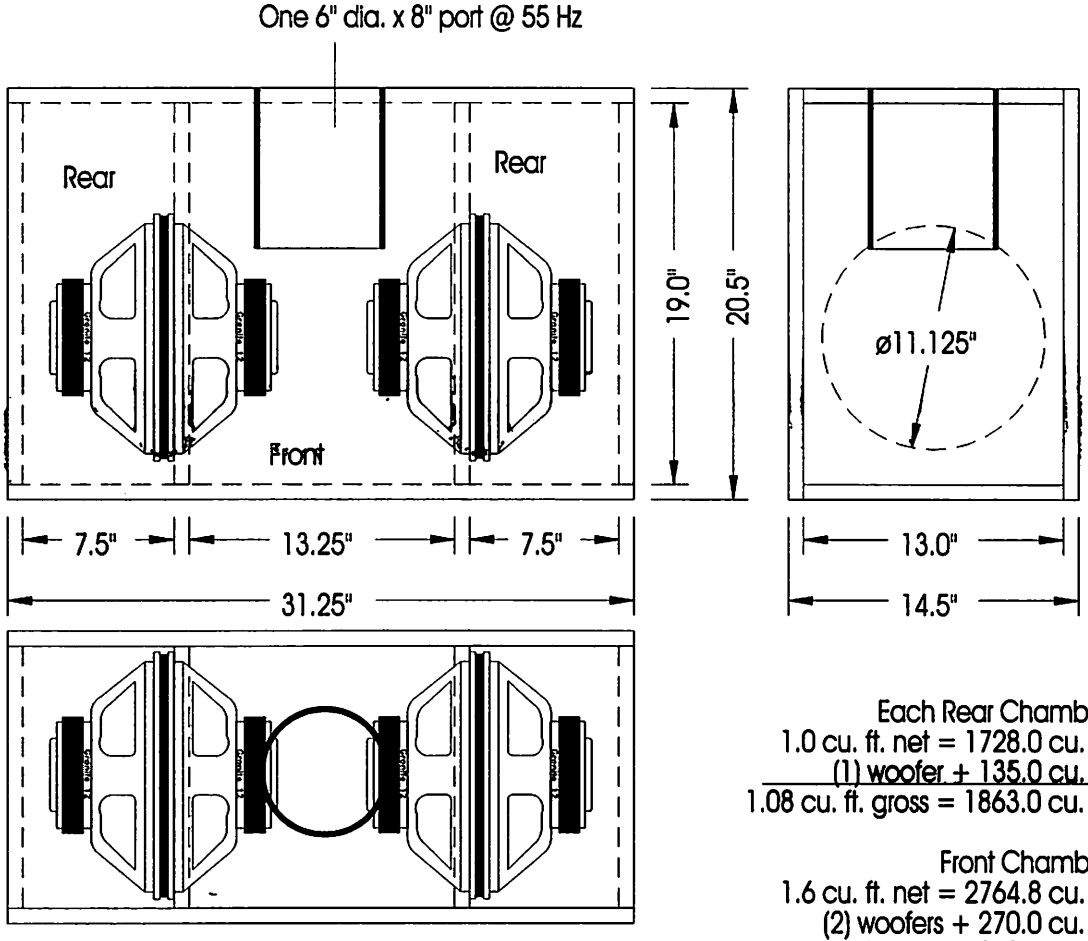

Each Rear Chamber:
1.0 cu. ft. net = 1728.0 cu. in.
(1) woofer + 135.0 cu. in.
1.08 cu. ft. gross = 1863.0 cu. in.

Front Chamber:
1.6 cu. ft. net = 2764.8 cu. in.
(2) woofers + 270.0 cu. in.
(1) port + 240.5 cu. in.
1.9 cu. ft. gross = 3275.4 cu. in.

NOTE: Line all walls with 1" fiberglass insulation or similar material!

SOUNDSTREAM® TECHNOLOGIES
R & D Loudspeaker Performance Projection
SPL vs. Frequency (2.0 volts input / 1 meter)
Response includes 12 dB / Oct LP @ 100 Hz

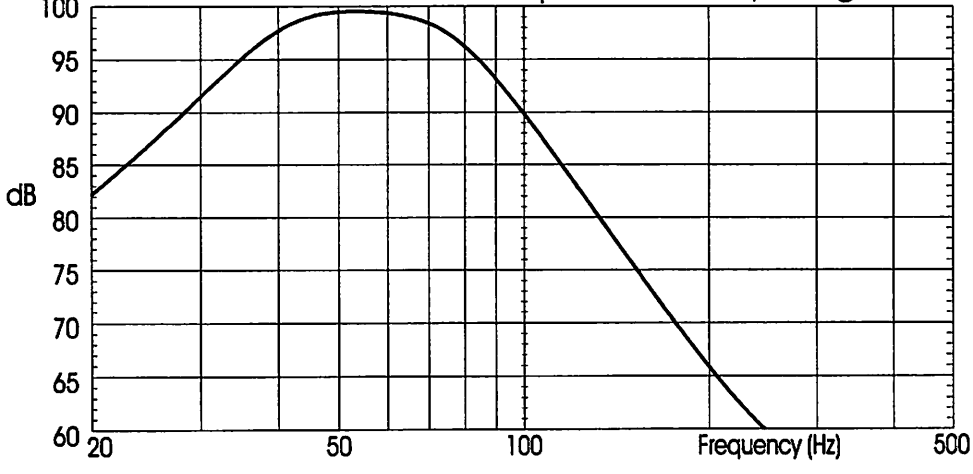

Application Notes:

CODE: G12EN8

SOUNDSTREAM®
TECHNOLOGIES

Woofer: Granite Pro 12
Enclosure Type: Sealed Bandpass
Music Type: Good output with excellent low bass extension

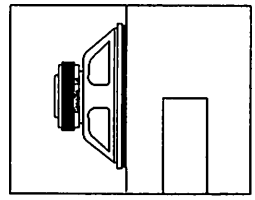

3.72 cu. ft. o.d.

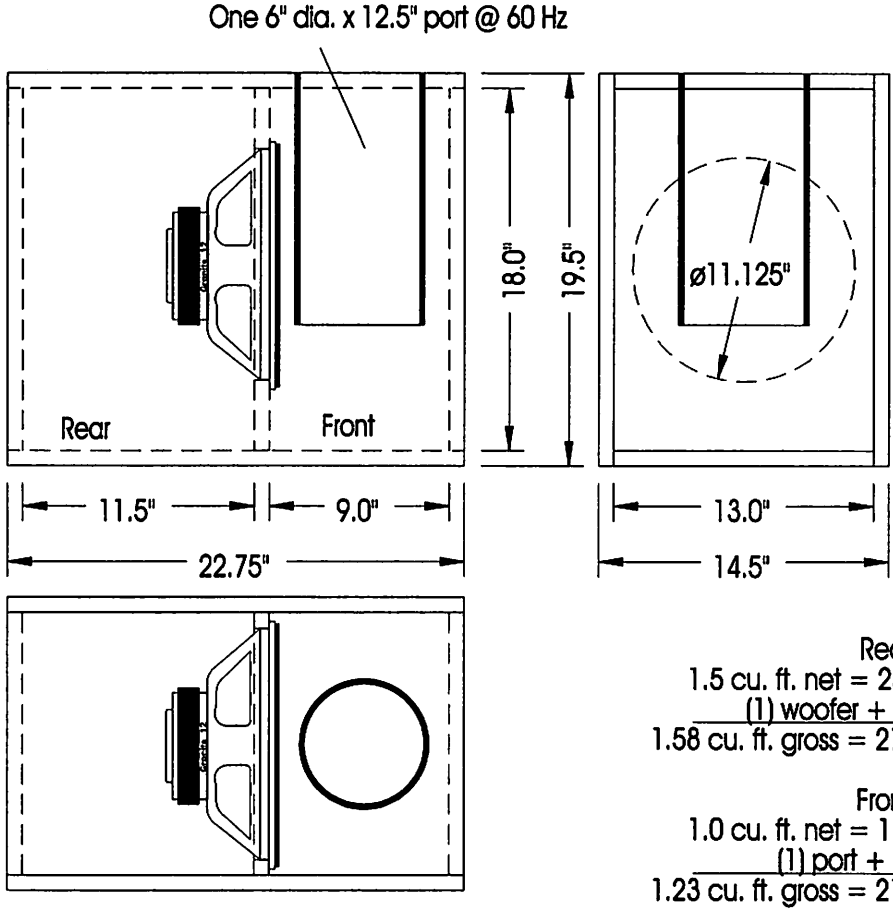

Rear Chamber:
1.5 cu. ft. net = 2592.0 cu. in.
(1) woofer + 135.0 cu. in.
1.58 cu. ft. gross = 2727.0 cu. in.

Front Chamber:
1.0 cu. ft. net = 1728.0 cu. in.
(1) port + 389.9 cu. in.
1.23 cu. ft. gross = 2117.9 cu. in.

NOTE: Line all walls with 1" fiberglass insulation or similar material!

SOUNDSTREAM® TECHNOLOGIES
R & D Loudspeaker Performance Projection
SPL vs. Frequency (2.0 volts input / 1 meter)
Response includes 12 dB / Oct LP @ 100 Hz

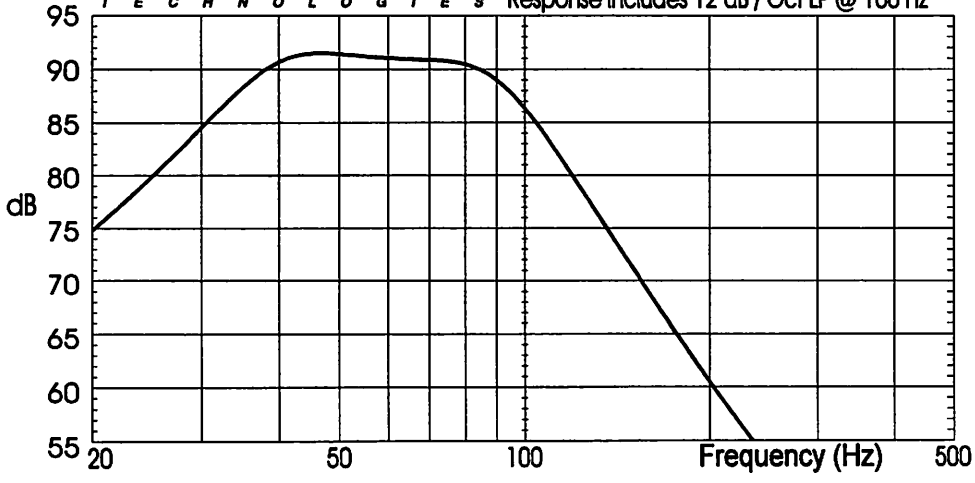

Application Notes:

- _____
- _____
- _____
- _____
- _____
- _____
- _____

CODE: G12EN9

SOUNDSTREAM®

TECHNOLOGIES

Woofer: Granite Pro 12
Enclosure Type: Sealed Bandpass (2 woofer version)
Music Type: Home Theater Enclosure

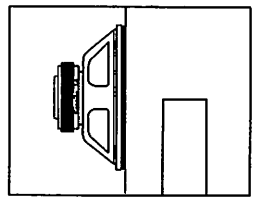

13.33 cu. ft. o.d.

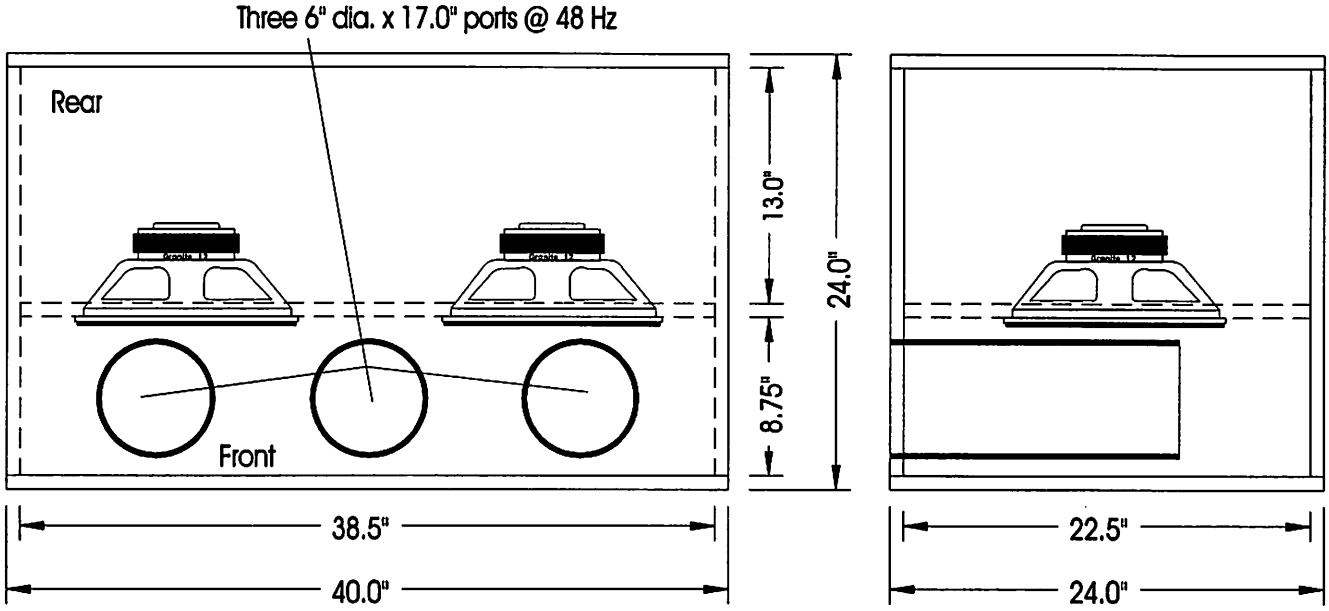

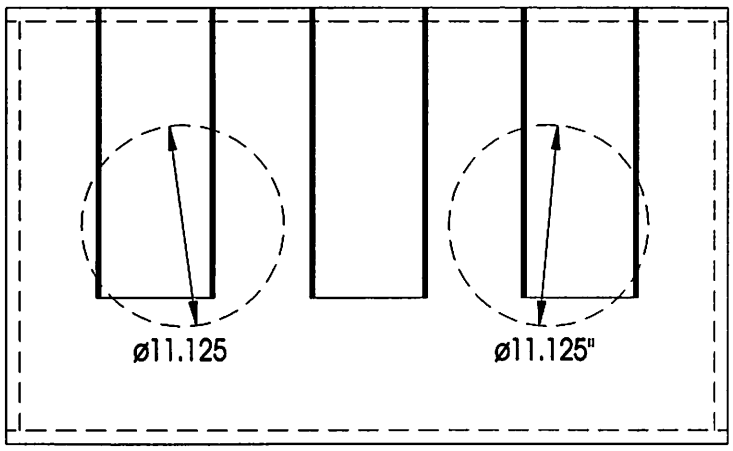

Rear Chamber:
6.4 cu. ft. net = 11,059.2 cu. in.
(2) woofers + 270.0 cu. in.
6.56 cu. ft. gross = 11,329.2 cu. in.

Front Chamber:
3.4 cu. ft. net = 5,875.2 cu. in.
(3) ports + 1,617.5 cu. in.
4.34 cu. ft. gross = 7492.7 cu. in.

NOTE: Line all walls with 1" fiberglass insulation or similar material!

SOUNDSTREAM® TECHNOLOGIES

R & D Loudspeaker Performance Projection
SPL vs. Frequency (2.0 volts input / 1 meter)
Response includes 12 dB / Oct LP @ 100 Hz

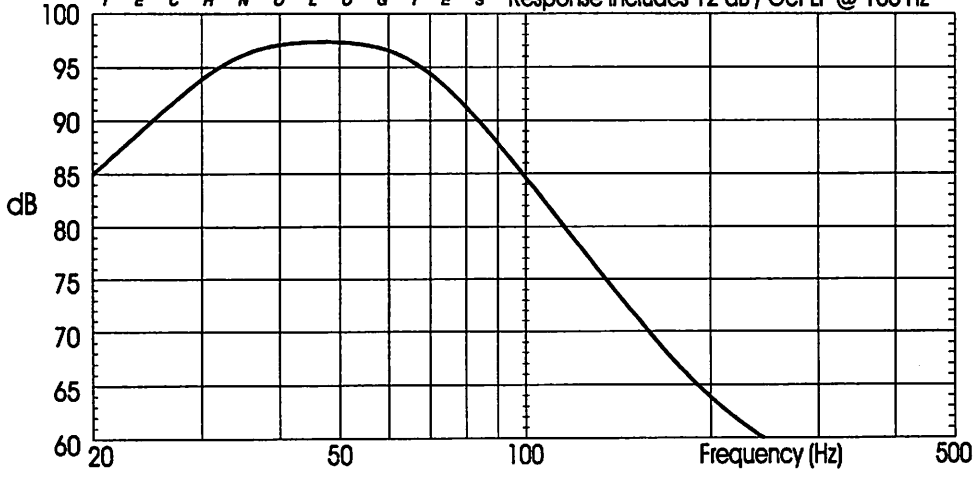

Application Notes:

- _____
- _____
- _____
- _____
- _____
- _____
- _____

CODE: G12EN10

SOUNDSTREAM®
TECHNOLOGIES

Woofer: Granite Pro 15
Enclosure Type: Sealed Bandpass (Isobaric configuration)
Music Type: Home Theater Subwoofer

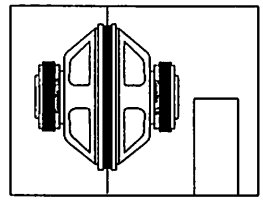

7.48 cu. ft. o.d.

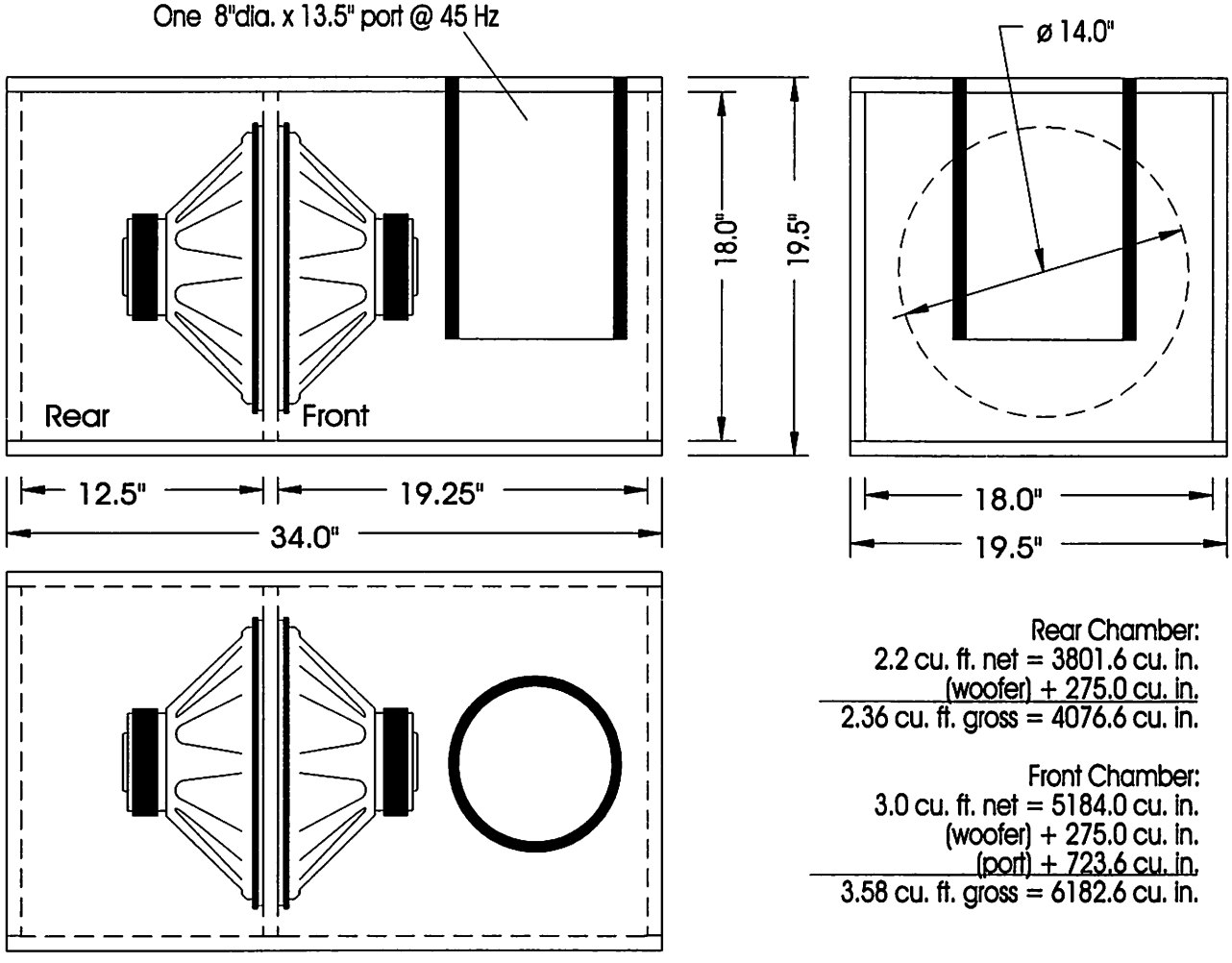

Rear Chamber:
2.2 cu. ft. net = 3801.6 cu. in.
(woofer) + 275.0 cu. in.
2.36 cu. ft. gross = 4076.6 cu. in.

Front Chamber:
3.0 cu. ft. net = 5184.0 cu. in.
(woofer) + 275.0 cu. in.
(port) + 723.6 cu. in.
3.58 cu. ft. gross = 6182.6 cu. in.

NOTE: Line all walls with 1" fiberglass insulation or similar material!

SOUNDSTREAM® TECHNOLOGIES
R & D Loudspeaker Performance Projection
SPL vs. Frequency (2.0 volts input / 1 meter)
Response includes 12 dB / Oct LP @ 100 Hz

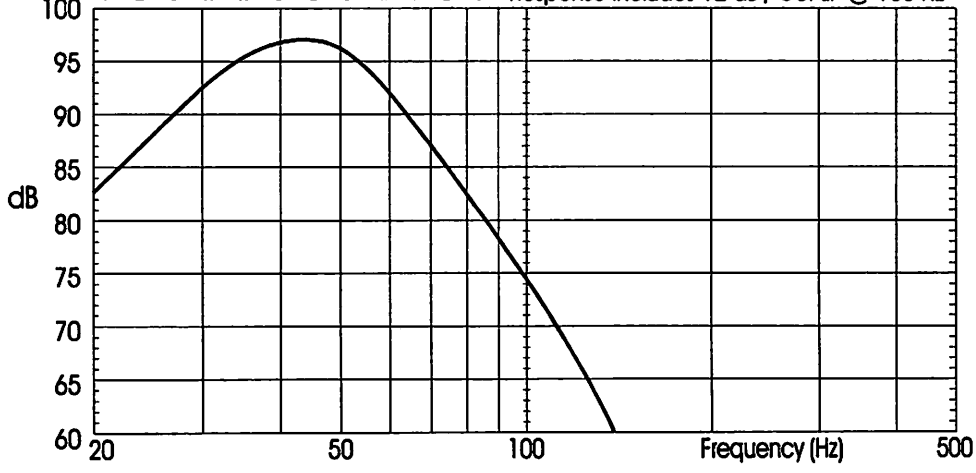

Application Notes:

- _____
- _____
- _____
- _____
- _____
- _____
- _____

CODE: G15EN1

SOUNDSTREAM®

TECHNOLOGIES

Woofer: Granite Pro 15
Enclosure Type: Sealed
Music Type: Good medium power enclosure, good for jazz & rock

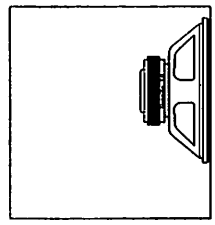

4.13 cu. ft. o.d.

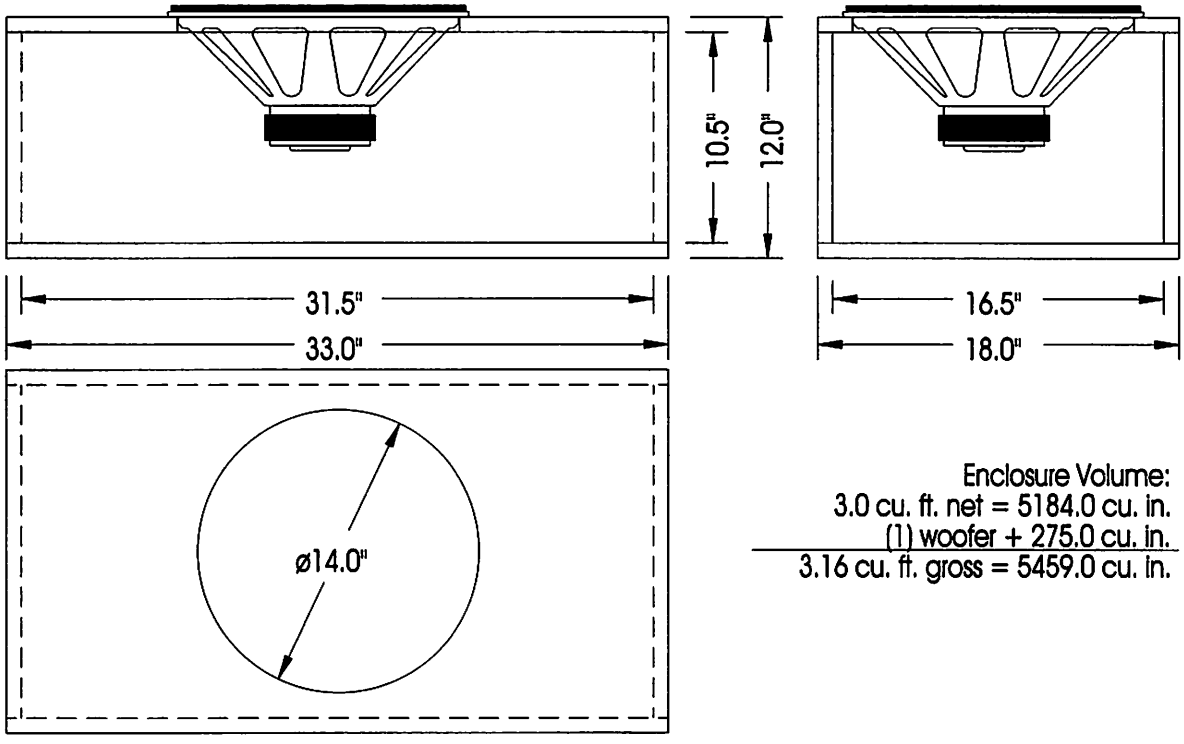

Enclosure Volume:
3.0 cu. ft. net = 5184.0 cu. in.
(1) woofer + 275.0 cu. in.
3.16 cu. ft. gross = 5459.0 cu. in.

NOTE: Line all walls with 1" fiberglass insulation or similar material!

SOUNDSTREAM® TECHNOLOGIES

R & D Loudspeaker Performance Projection
SPL vs. Frequency (2.0 volts input / 1 meter)
Response includes 12 dB / Oct LP @ 100 Hz

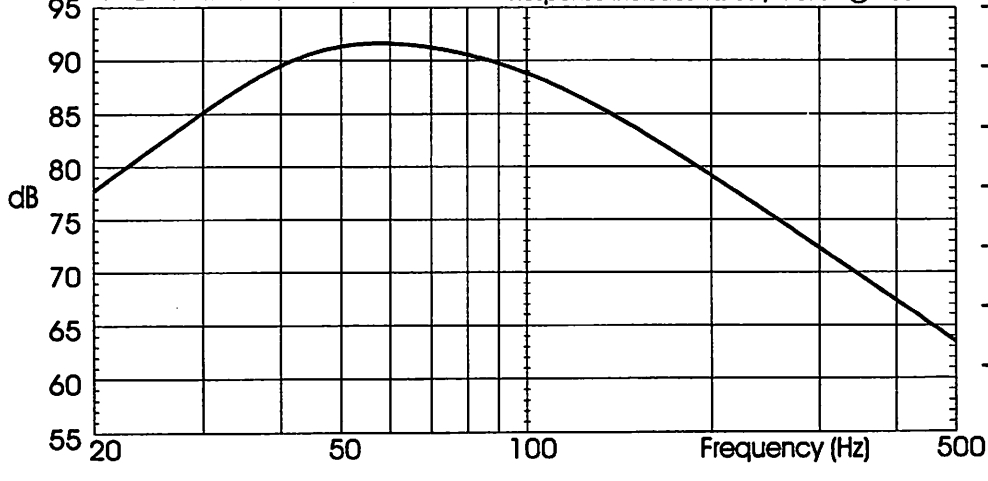

Application Notes:

- _____
- _____
- _____
- _____
- _____
- _____
- _____

CODE: G15EN2

SOUNDSTREAM®

TECHNOLOGIES

Woofer: Granite Pro 15
Enclosure Type: Sealed
Music Type: Very good for classical & jazz, smooth response

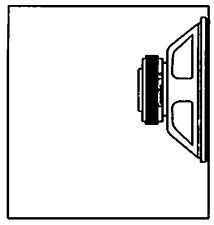

5.33 cu. ft. o.d.

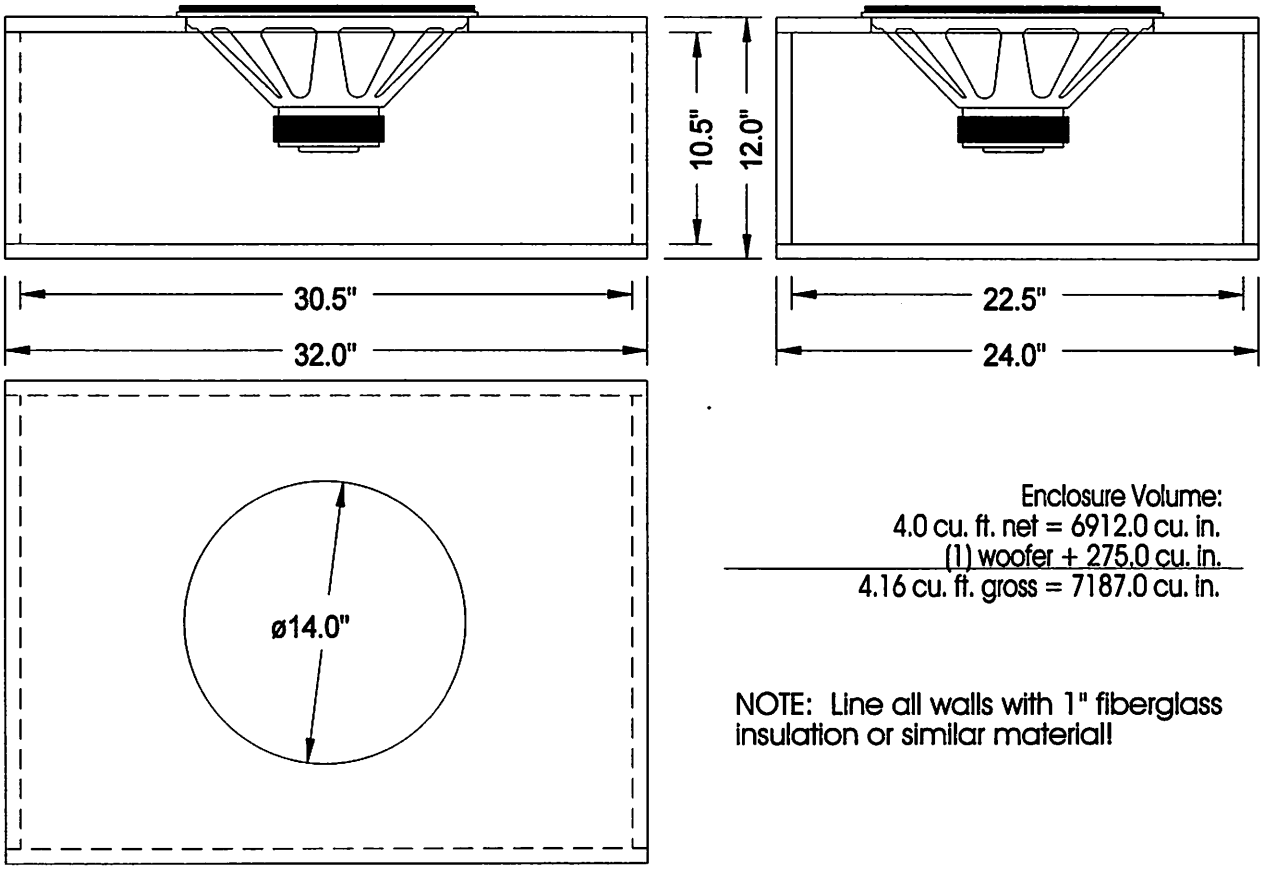

Enclosure Volume:
4.0 cu. ft. net = 6912.0 cu. in.
(1) woofer + 275.0 cu. in.
4.16 cu. ft. gross = 7187.0 cu. in.

NOTE: Line all walls with 1" fiberglass insulation or similar material!

SOUNDSTREAM® TECHNOLOGIES R & D Loudspeaker Performance Projection
SPL vs. Frequency (2.0 volts input / 1 meter)
Response includes 12 dB / Oct LP @ 100 Hz

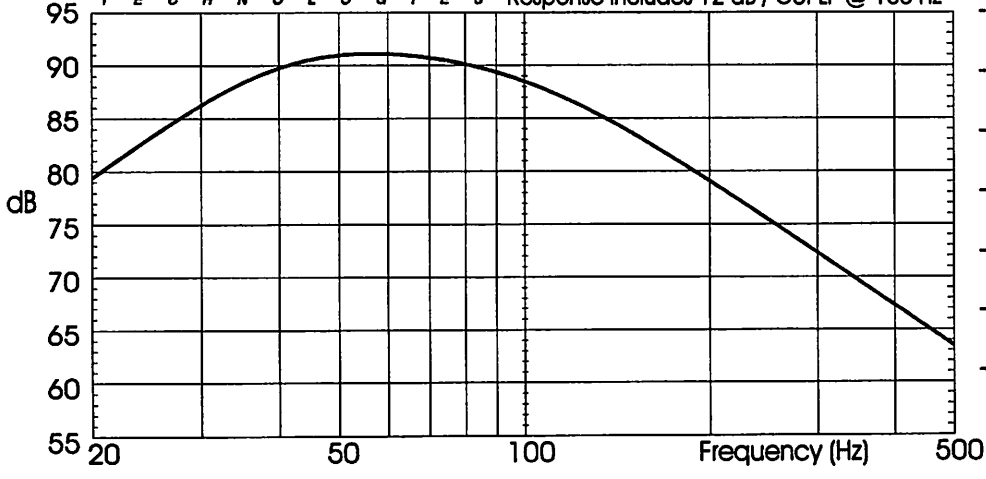

Application Notes:

CODE: G15EN3

SOUNDSTREAM®
TECHNOLOGIES

Woofer: Granite Pro 15
Enclosure Type: Vented
Music Type: Very good all around enclosure

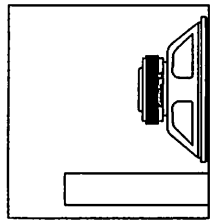
9.00 cu. ft. o.d.

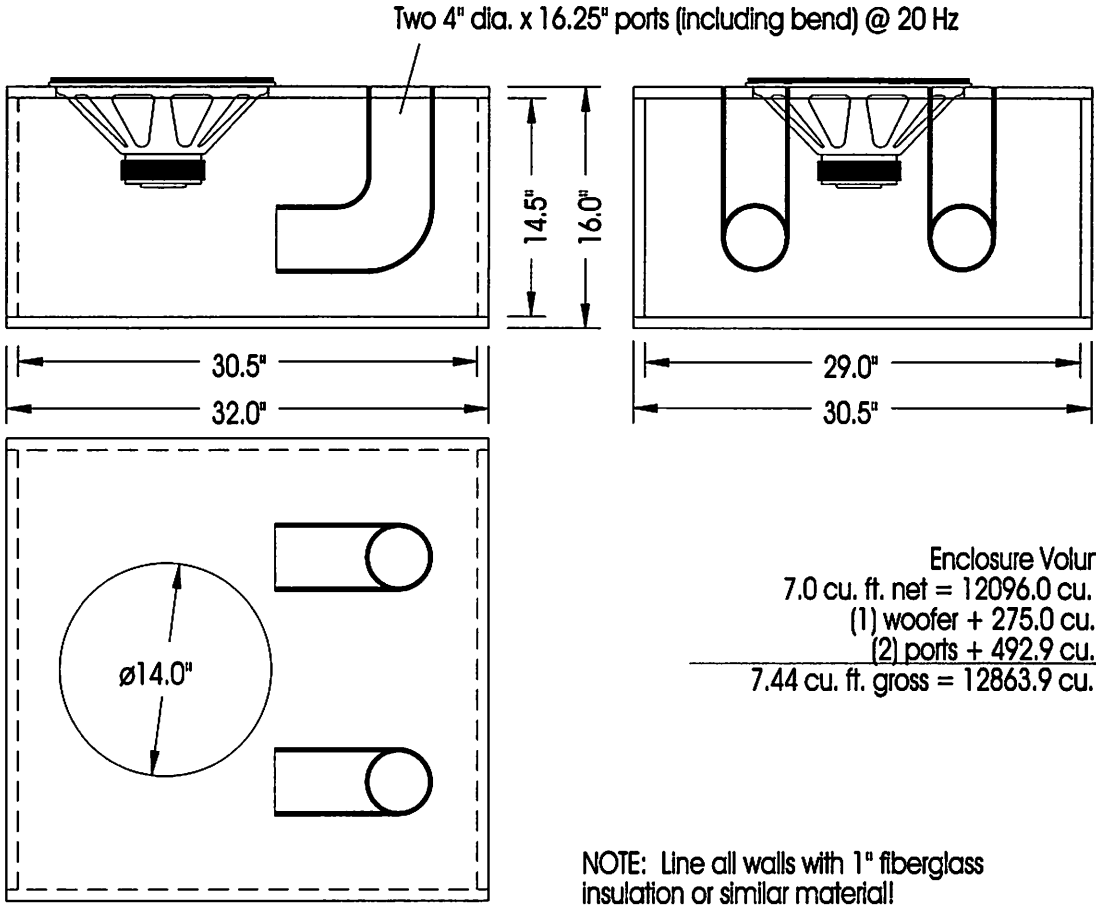

Enclosure Volume:
7.0 cu. ft. net = 12096.0 cu. in.
(1) woofer + 275.0 cu. in.
(2) ports + 492.9 cu. in.
7.44 cu. ft. gross = 12863.9 cu. in.

NOTE: Line all walls with 1" fiberglass insulation or similar material!

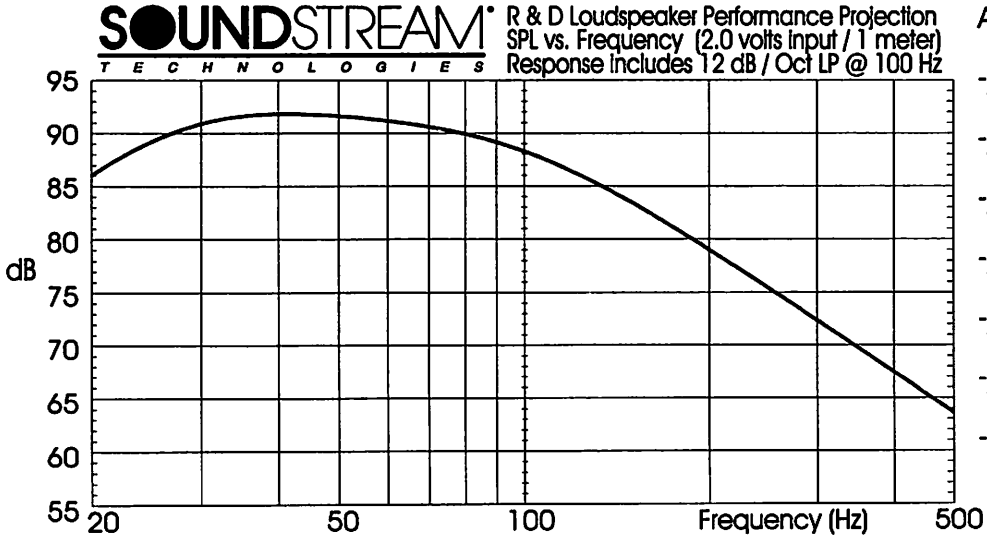

Application Notes:

- _____
- _____
- _____
- _____
- _____
- _____
- _____

CODE: G15EN4

SOUNDSTREAM®

TECHNOLOGIES

Woofer: Granite Pro 15
Enclosure Type: Vented (Isobaric Configuration)
Music Type: Very good all around enclosure

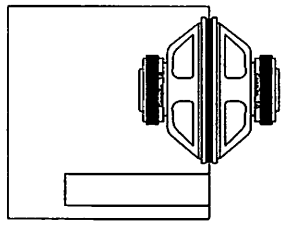

7.41 cu. ft. o.d.

Two 4" dia. x 21" ports (including bend) @ 20 Hz

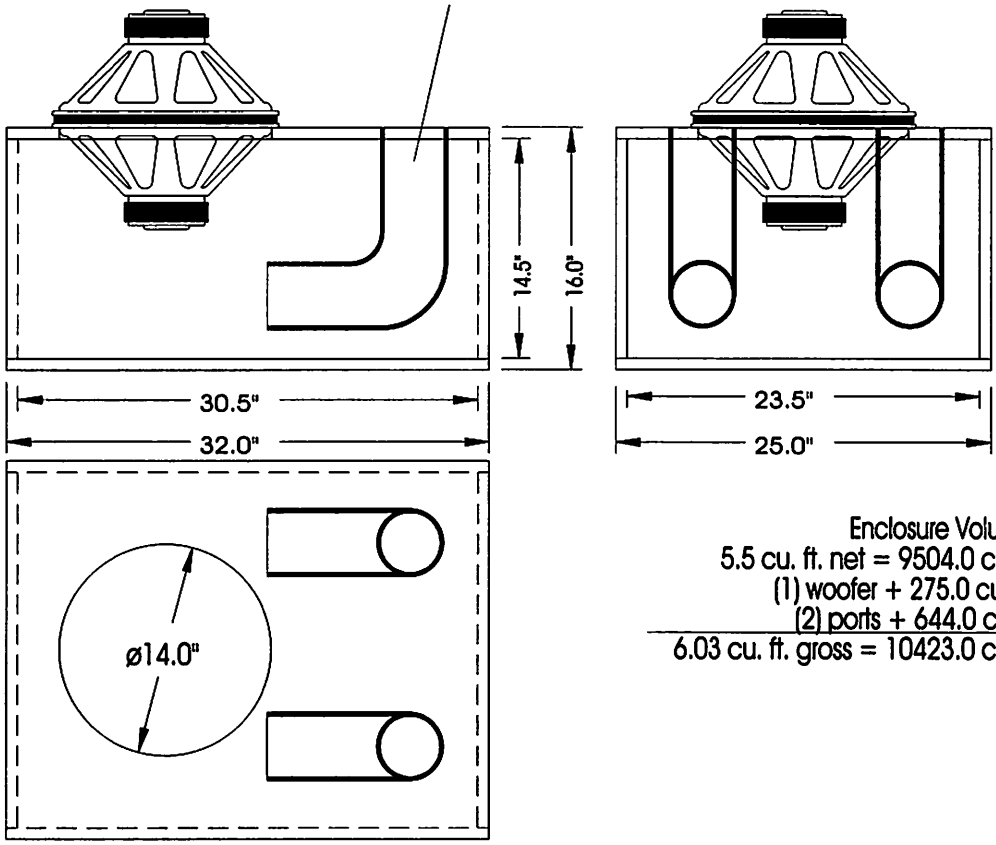

Enclosure Volume:
5.5 cu. ft. net = 9504.0 cu. in.
(1) woofer + 275.0 cu. in.
(2) ports + 644.0 cu. in.
6.03 cu. ft. gross = 10423.0 cu. in.

NOTE: Line all walls with 1" fiberglass insulation or similar material!

SOUNDSTREAM® TECHNOLOGIES

R & D Loudspeaker Performance Projection
SPL vs. Frequency (2.0 volts input / 1 meter)
Response includes 12 dB / Oct LP @ 100 Hz

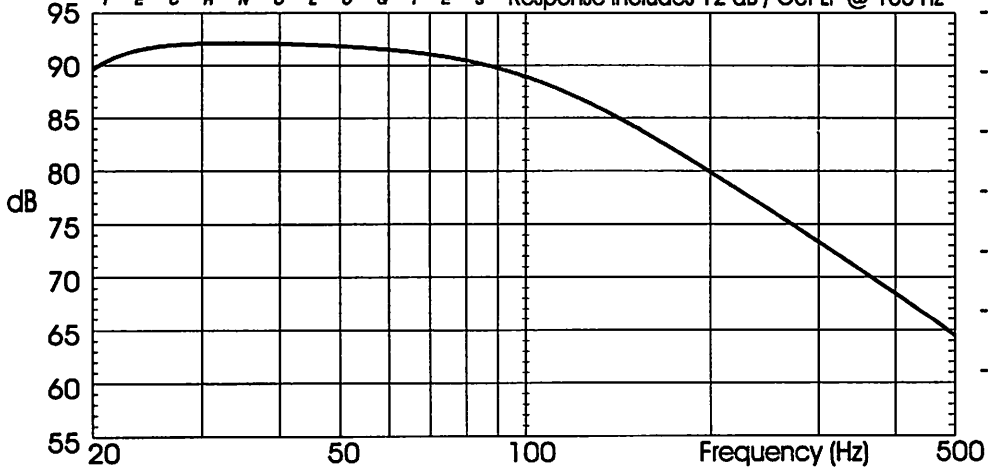

Application Notes:

CODE: G15EN5

SOUNDSTREAM®
TECHNOLOGIES

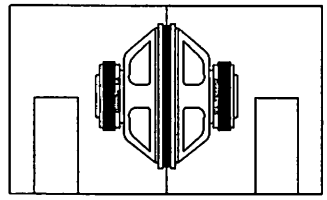
8.68 cu. ft. o.d.

Woofer: Granite Pro 15
Enclosure Type: Vented Bandpass #17 (Isobaric Configuration)
Music Type: High SPL, good for rock & rap

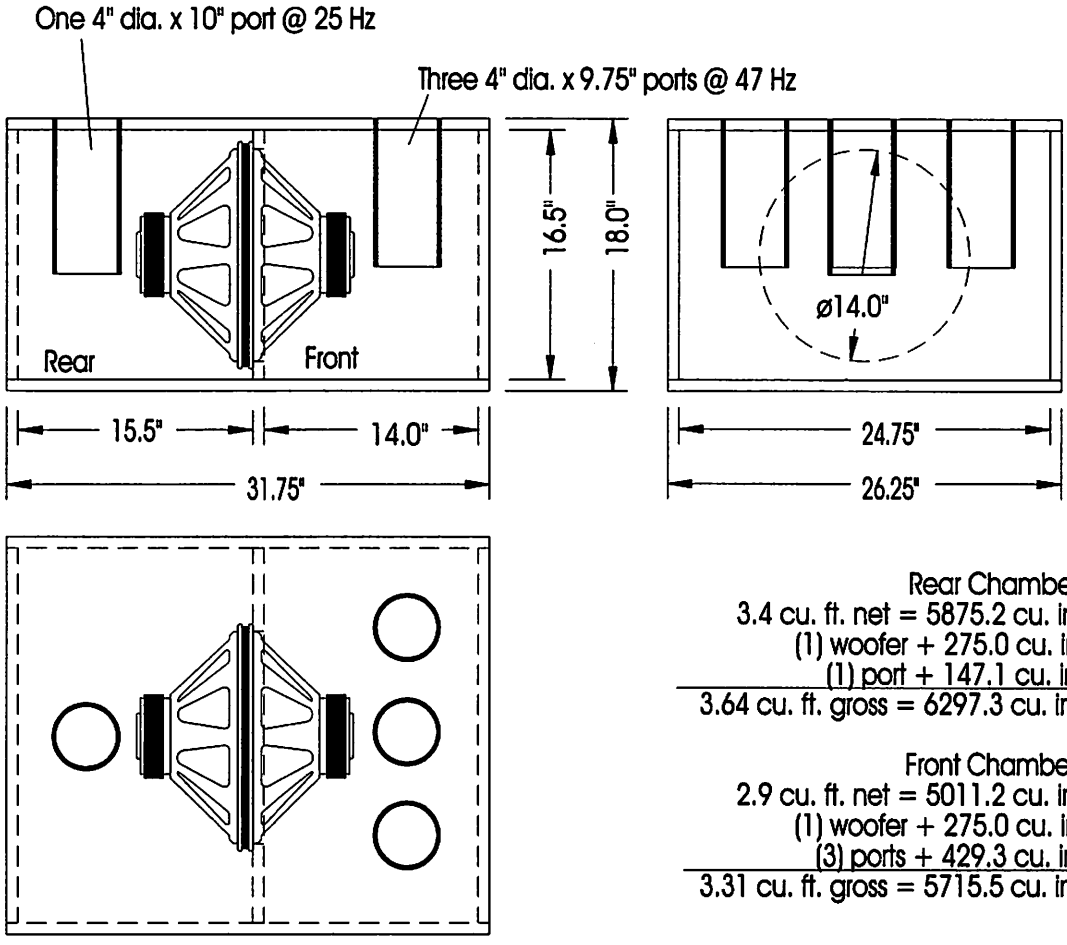

Rear Chamber:
3.4 cu. ft. net = 5875.2 cu. in.
(1) woofer + 275.0 cu. in.
(1) port + 147.1 cu. in.
3.64 cu. ft. gross = 6297.3 cu. in.

Front Chamber:
2.9 cu. ft. net = 5011.2 cu. in.
(1) woofer + 275.0 cu. in.
(3) ports + 429.3 cu. in.
3.31 cu. ft. gross = 5715.5 cu. in.

NOTE: Line all walls with 1" fiberglass insulation or similar material!

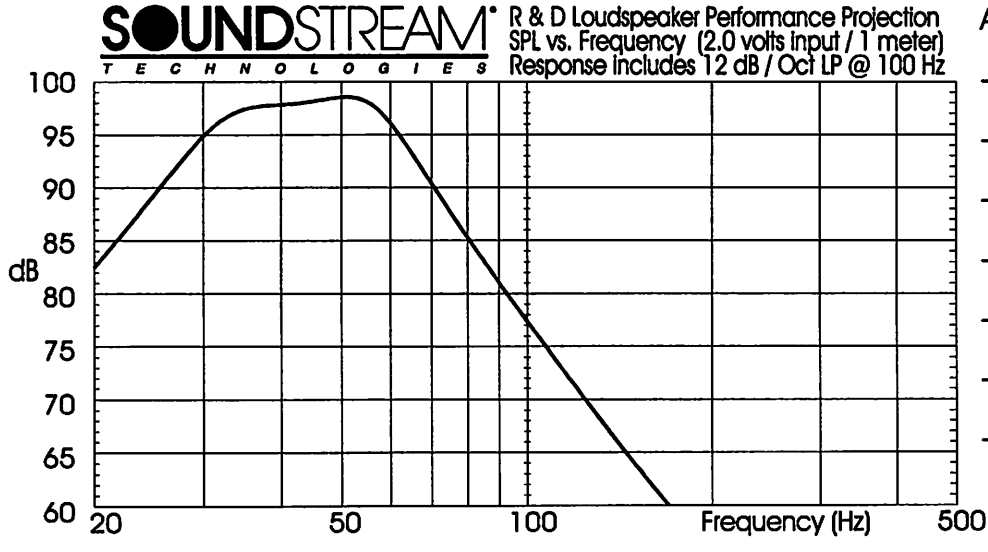

Application Notes:

CODE: G15EN6

SOUNDSTREAM®

TECHNOLOGIES

Woofer: Granite Pro 15
Enclosure Type: Sealed Bandpass #13
Music Type: High SPL, good for rock or rap

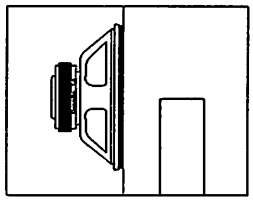

10.25 cu. ft. o.d.

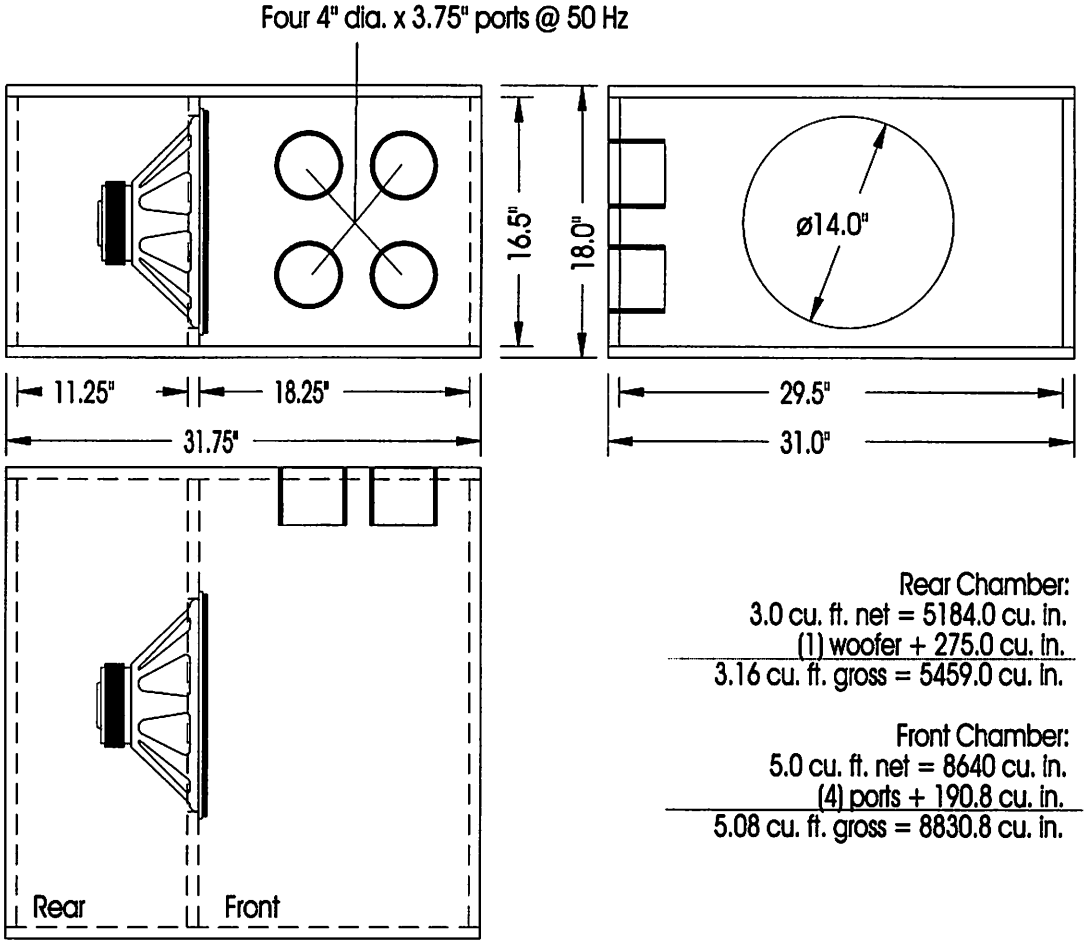

Rear Chamber:
3.0 cu. ft. net = 5184.0 cu. in.
(1) woofer + 275.0 cu. in.
3.16 cu. ft. gross = 5459.0 cu. in.

Front Chamber:
5.0 cu. ft. net = 8640 cu. in.
(4) ports + 190.8 cu. in.
5.08 cu. ft. gross = 8830.8 cu. in.

NOTE: Line all walls with 1" fiberglass insulation or similar material!

SOUNDSTREAM® TECHNOLOGIES

R & D Loudspeaker Performance Projection
SPL vs. Frequency (2.0 volts input / 1 meter)
Response includes 12 dB / Oct LP @ 100 Hz

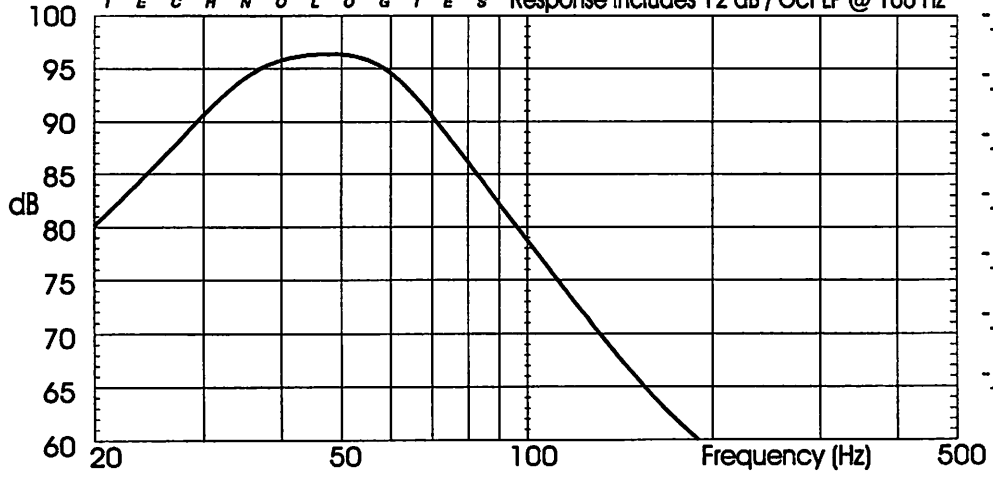

Application Notes:

- _____
- _____
- _____
- _____
- _____
- _____
- _____

CODE: G15EN7

SOUNDSTREAM®
TECHNOLOGIES

Woofer: Granite Pro 15
Enclosure Type: Sealed Bandpass #14 (Isobaric Configuration)
Music Type: High SPL, good for rock or rap

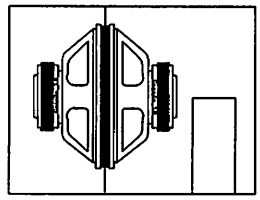
5.67 cu. ft. o.d.

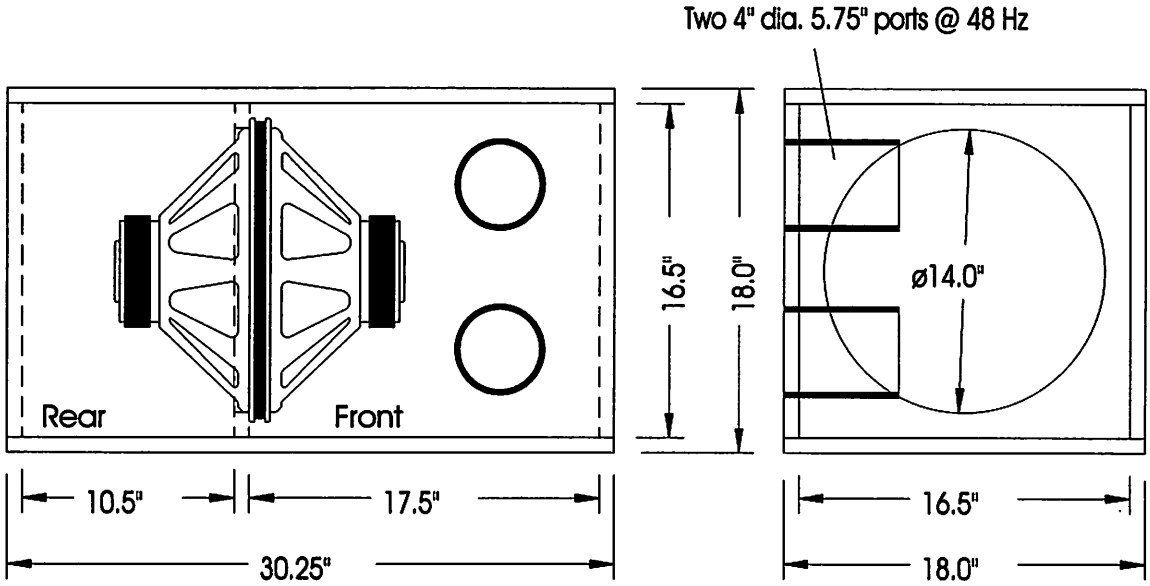

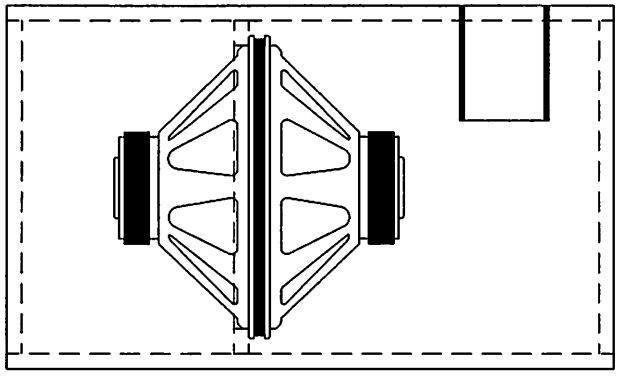

Rear Chamber:
1.5 cu. ft. net = 2592.0 cu. in.
(1) woofer + 275.0 cu. in.
1.66 cu. ft. gross = 2867.0 cu. in.

Front Chamber:
2.5 cu. ft. net = 4320.0 cu. in.
(1) woofer + 275.0 cu. in.
(2) ports + 159.0 cu. in.
2.75 cu. ft. gross = 4754.0 cu. in.

NOTE: Line all walls with 1" fiberglass insulation or similar material!

SOUNDSTREAM® TECHNOLOGIES
R & D Loudspeaker Performance Projection
SPL vs. Frequency (2.0 volts input / 1 meter)
Response includes 12 dB / Oct LP @ 100 Hz

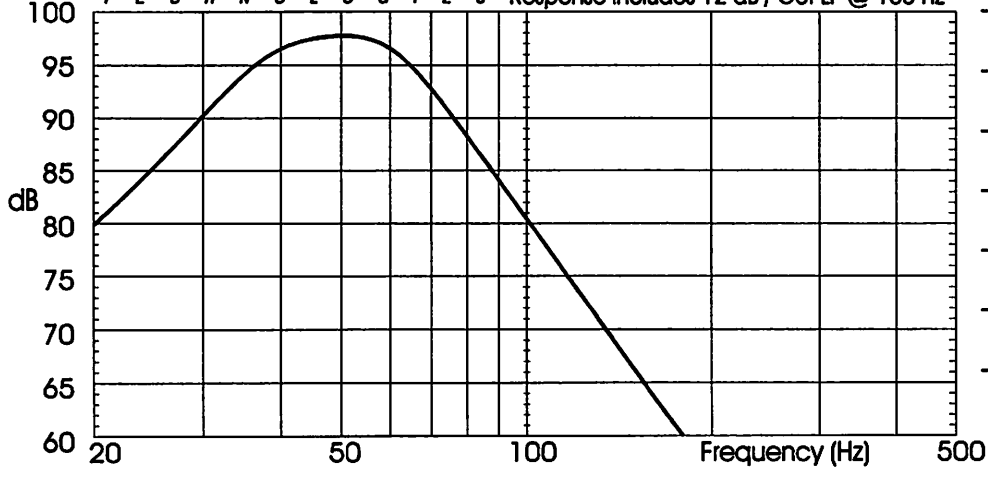

Application Notes:

- _____
- _____
- _____
- _____
- _____
- _____
- _____

CODE: G15EN8

SOUNDSTREAM®
TECHNOLOGIES

Woofer: Granite Pro 15
Enclosure Type: Vented Bandpass
Music Type: High SPL; Rock or Rap

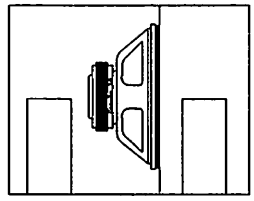

7.74 cu. ft. o.d.

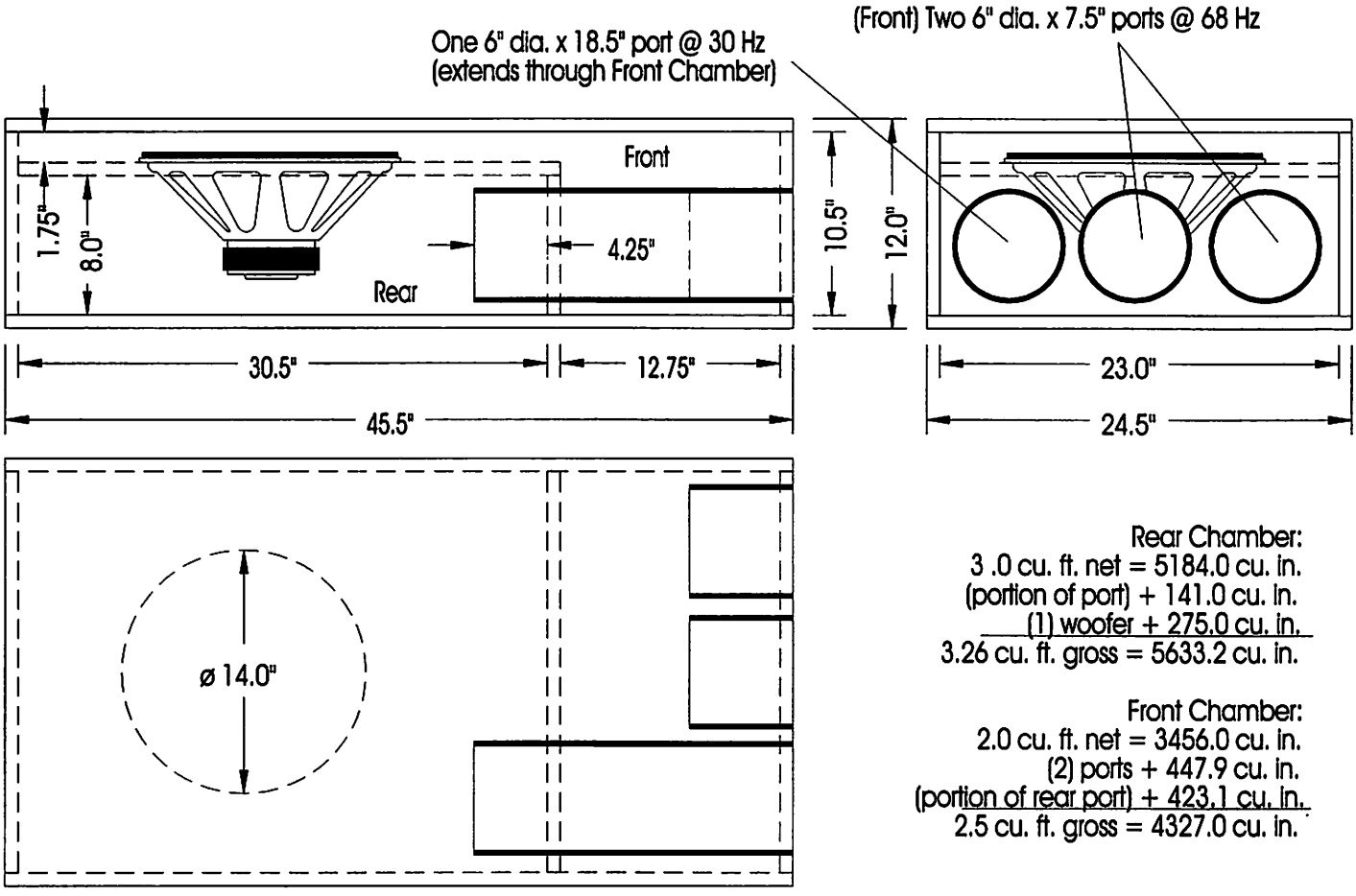

Rear Chamber:
3 .0 cu. ft. net = 5184.0 cu. in.
(portion of port) + 141.0 cu. in.
(1) woofer + 275.0 cu. in.
3.26 cu. ft. gross = 5633.2 cu. in.

Front Chamber:
2.0 cu. ft. net = 3456.0 cu. in.
(2) ports + 447.9 cu. in.
(portion of rear port) + 423.1 cu. in.
2.5 cu. ft. gross = 4327.0 cu. in.

NOTE: Line all walls with 1" fiberglass insulation or similar material!

SOUNDSTREAM® TECHNOLOGIES
R & D Loudspeaker Performance Projection
SPL vs. Frequency (2.0 volts input / 1 meter)
Response includes 12 dB / Oct LP @ 100 Hz

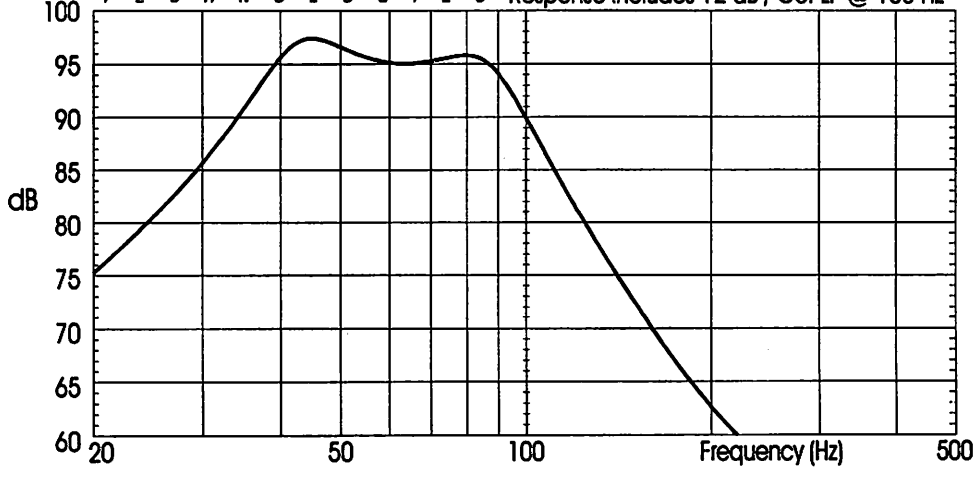

Application Notes:

CODE: G15EN9

SOUNDSTREAM®

TECHNOLOGIES

Woofer: Granite Pro 15
Enclosure Type: Vented Bandpass #16
Music Type: Very deep bass for Home Theater

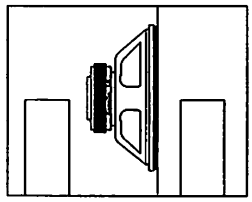

16.00 cu. ft. o.d.

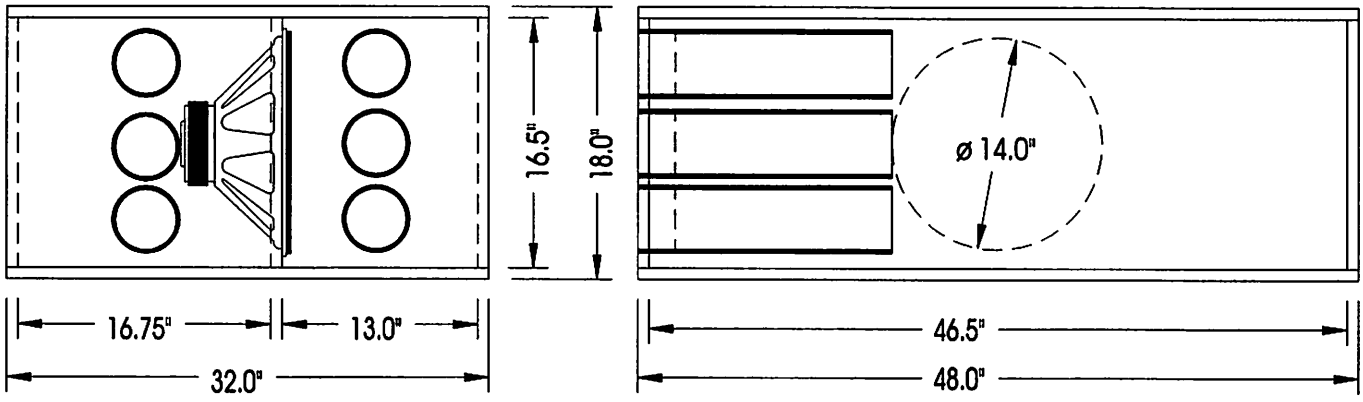

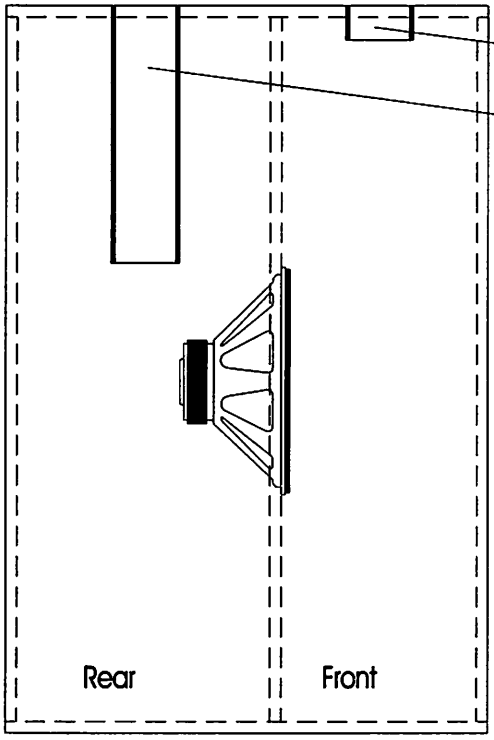

Three 4" dia. x 2.5" ports @ 45 Hz

Three 4" dia. x 17" ports @ 24 Hz

Rear Chamber:
6.8 cu. ft. net = 11,750.4 cu. in.
(1) woofer + 275.0 cu. in.
(3) ports + 775.1 cu. in.
7.4 cu. ft. gross = 12,800.5 cu. in.

Front Chamber:
5.8 cu. ft. net = 10,022.4 cu. in.
(3) ports + 83.5 cu. in.
5.85 cu. ft. gross = 10,105.9 cu. in.

NOTE: Line all walls with 1" fiberglass insulation or similar material!

SOUNDSTREAM® TECHNOLOGIES

R & D Loudspeaker Performance Projection
SPL vs. Frequency (2.0 volts input / 1 meter)
Response includes 12 dB / Oct LP @ 100 Hz

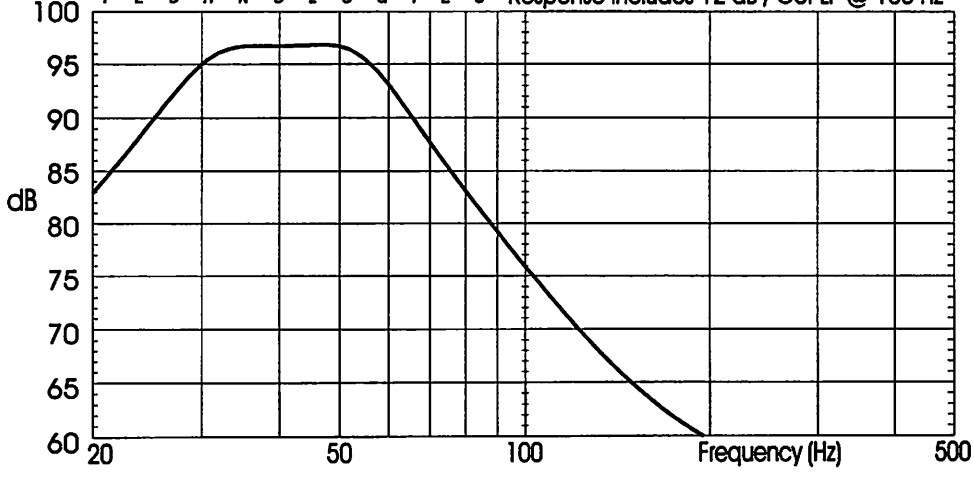

Application Notes:

-
-
-
-
-
-
-

CODE: G15EN10

SOUNDSTREAM®
TECHNOLOGIES

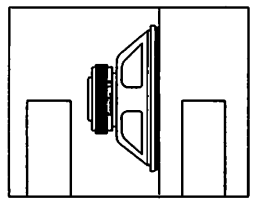

8.10 cu. ft. o.d.

Woofer: Granite Pro 15
Enclosure Type: Vented Bandpass
Music Type: Very high output for Trucks or Home Theater

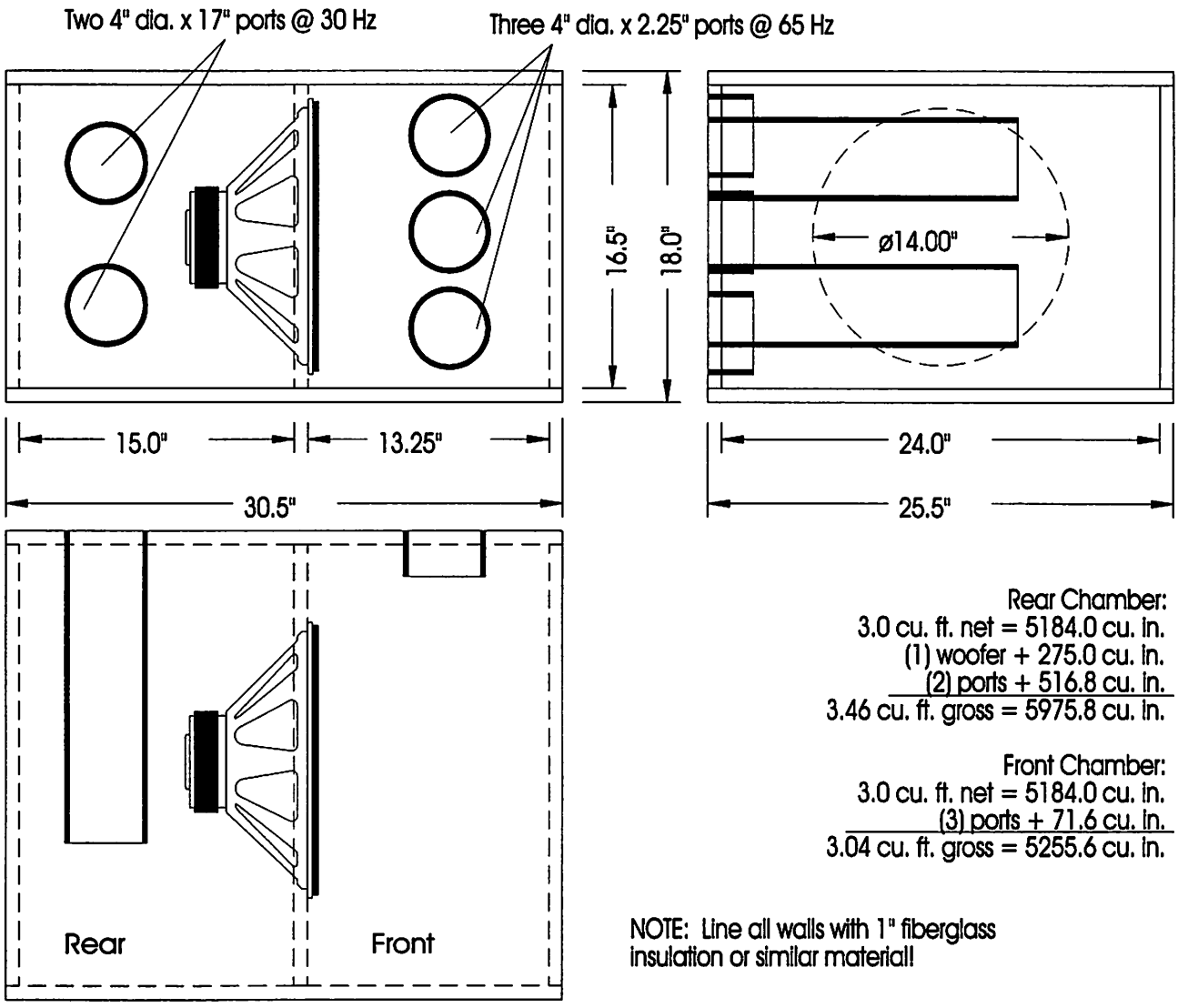

Rear Chamber:
3.0 cu. ft. net = 5184.0 cu. in.
(1) woofer + 275.0 cu. in.
(2) ports + 516.8 cu. in.
3.46 cu. ft. gross = 5975.8 cu. in.

Front Chamber:
3.0 cu. ft. net = 5184.0 cu. in.
(3) ports + 71.6 cu. in.
3.04 cu. ft. gross = 5255.6 cu. in.

NOTE: Line all walls with 1" fiberglass insulation or similar material!

SOUNDSTREAM® TECHNOLOGIES
R & D Loudspeaker Performance Projection
SPL vs. Frequency (2.0 volts input / 1 meter)
Response includes 12 dB / Oct LP @ 100 Hz

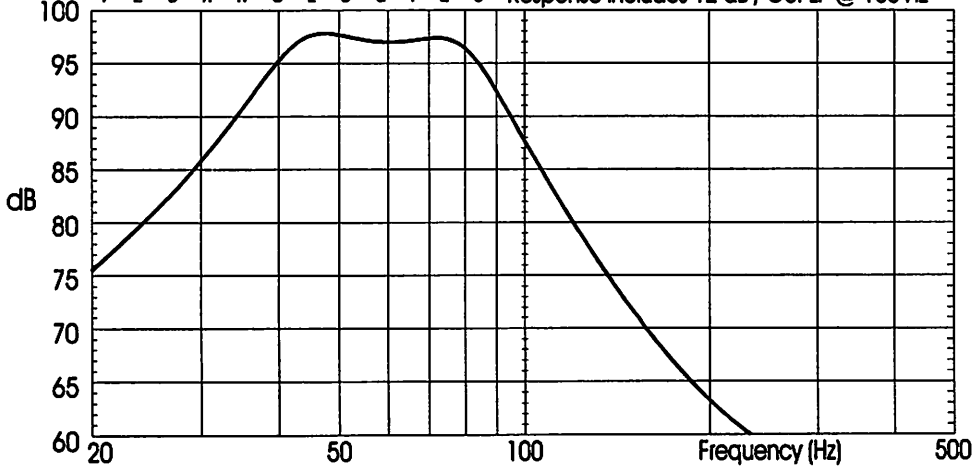

Application Notes:

CODE: G15EN11

SOUNDSTREAM®

TECHNOLOGIES

Woofer: Granite Pro15mkII
Enclosure Type: Sealed
Music Type: Good small enclosure for Jazz & Rock

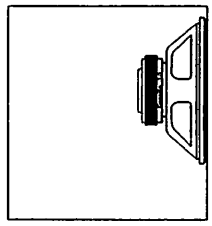

1.76 cu. ft. o.d.

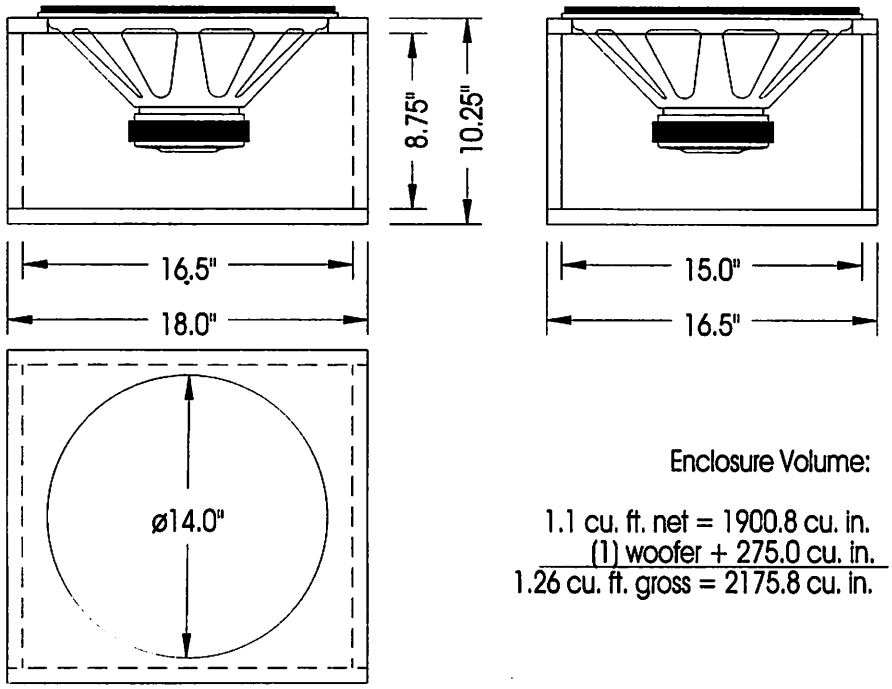

Enclosure Volume:

1.1 cu. ft. net = 1900.8 cu. in.
(1) woofer + 275.0 cu. in.
1.26 cu. ft. gross = 2175.8 cu. in.

NOTE: Line all walls with fiberglass insulation or similar material!

Predicted In-Car and Half-Space Anechoic Frequency Response

SOUNDSTREAM® TECHNOLOGIES

R & D Loudspeaker Performance Projection
SPL vs. Frequency (2.0 volts input / 1 meter)
Response includes 12 dB / Oct LP @ 100 Hz

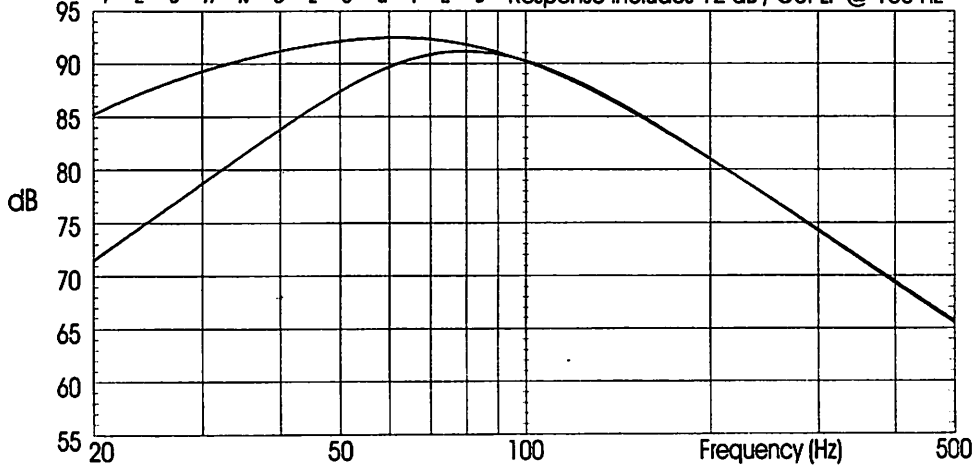

Application Notes:

-
-
-
-
-
-
-

CODE: GR15MK2EN1

SOUNDSTREAM®

TECHNOLOGIES

Woofer: Granite Pro15mkII
Enclosure Type: Sealed
Music Type: Good small enclosure for Jazz & Rock

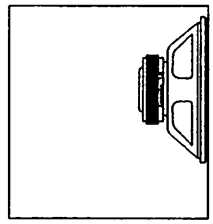

1.76 cu. ft. o.d.

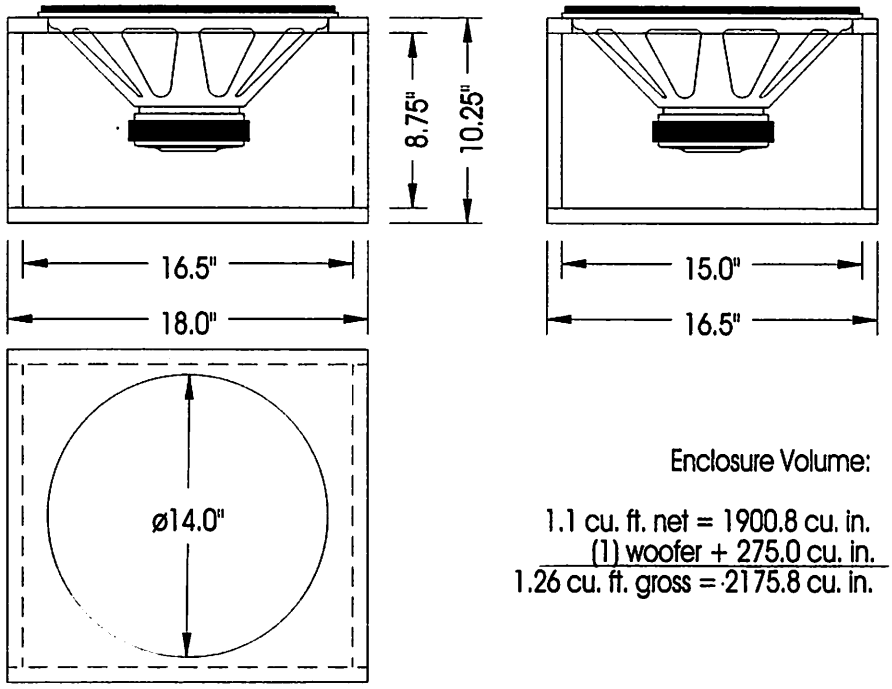

Enclosure Volume:

1.1 cu. ft. net = 1900.8 cu. in.
(1) woofer + 275.0 cu. in.
1.26 cu. ft. gross = 2175.8 cu. in.

NOTE: Line all walls with fiberglass insulation or similar material!

Predicted In-Car and Half-Space Anechoic Frequency Response

SOUNDSTREAM® TECHNOLOGIES

R & D Loudspeaker Performance Projection
SPL vs. Frequency (2.0 volts input / 1 meter)
Response includes 12 dB / Oct LP @ 100 Hz

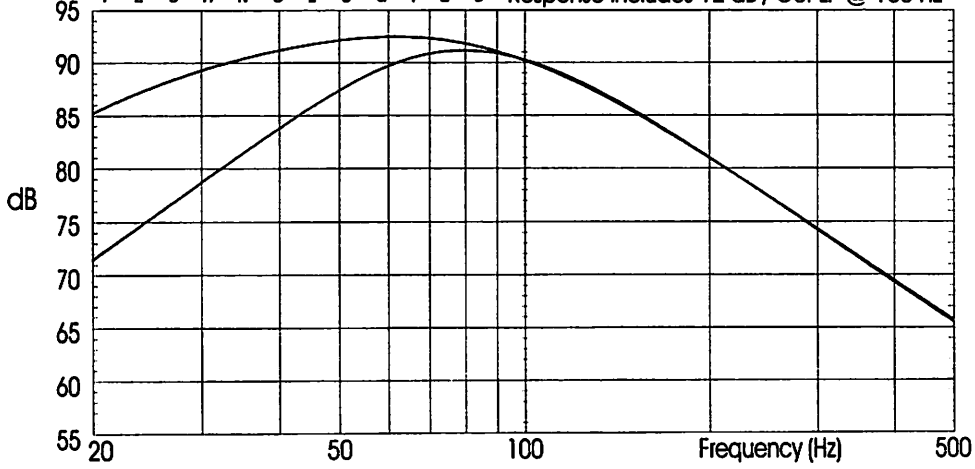

Application Notes:

-
-
-
-
-
-
-

CODE: GR15MK2EN1

SOUNDSTREAM®

TECHNOLOGIES

Woofer: Granite Pro15mkII
Enclosure Type: Sealed
Music Type: Very good for Classical or Jazz

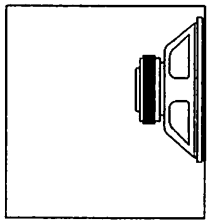

3.56 cu. ft. o.d.

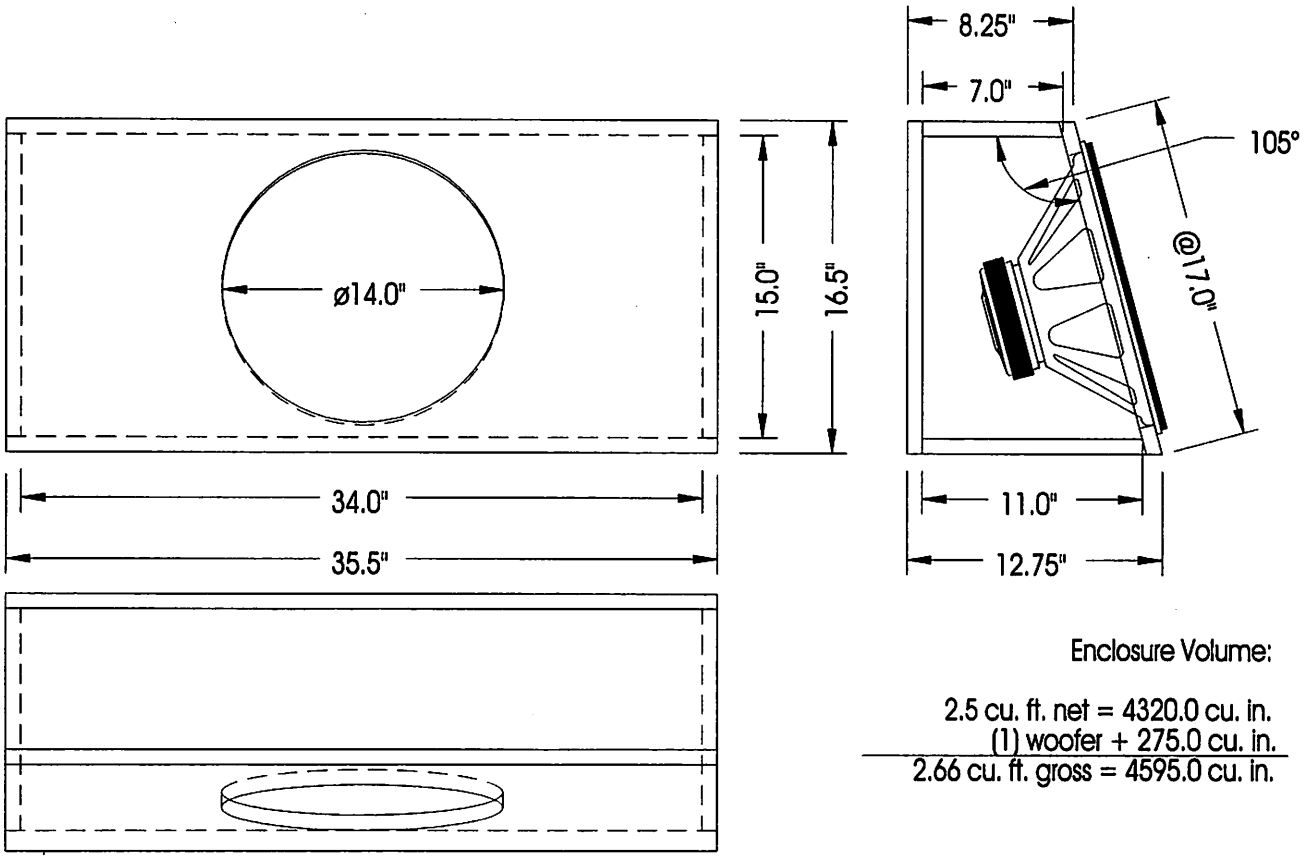

Enclosure Volume:

2.5 cu. ft. net = 4320.0 cu. in.
(1) woofer + 275.0 cu. in.
2.66 cu. ft. gross = 4595.0 cu. in.

NOTE: Line all walls with fiberglass insulation or similar material!

Predicted In-Car and Half-Space Anechoic Frequency Response

SOUNDSTREAM® TECHNOLOGIES

R & D Loudspeaker Performance Projection
SPL vs. Frequency (2.0 volts input / 1 meter)
Response includes 12 dB / Oct LP @ 100 Hz

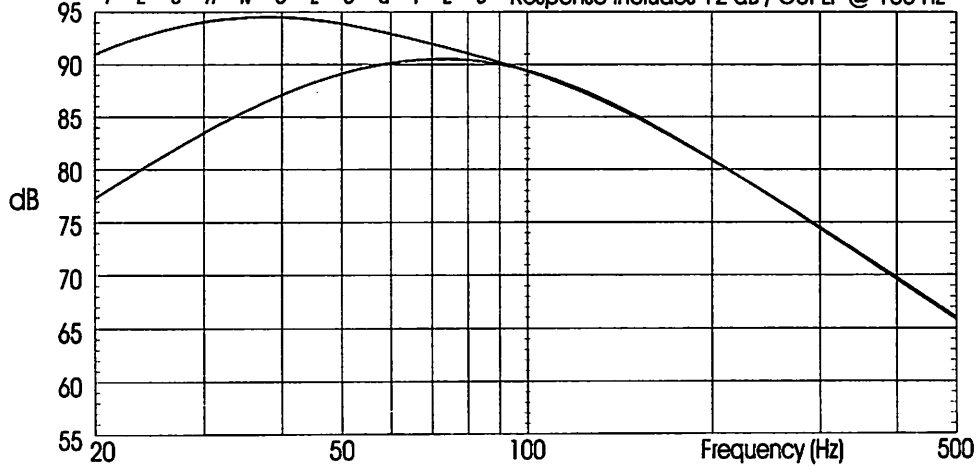

Application Notes:

-
-
-
-
-
-
-

CODE: GR15MK2EN2

SOUNDSTREAM®

TECHNOLOGIES

Woofer: Granite Pro15mkII
Enclosure Type: Vented
Music Type: High output small enclosure

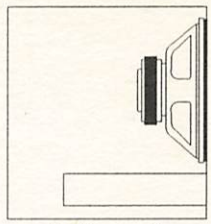

3.74 cu. ft. o.d.

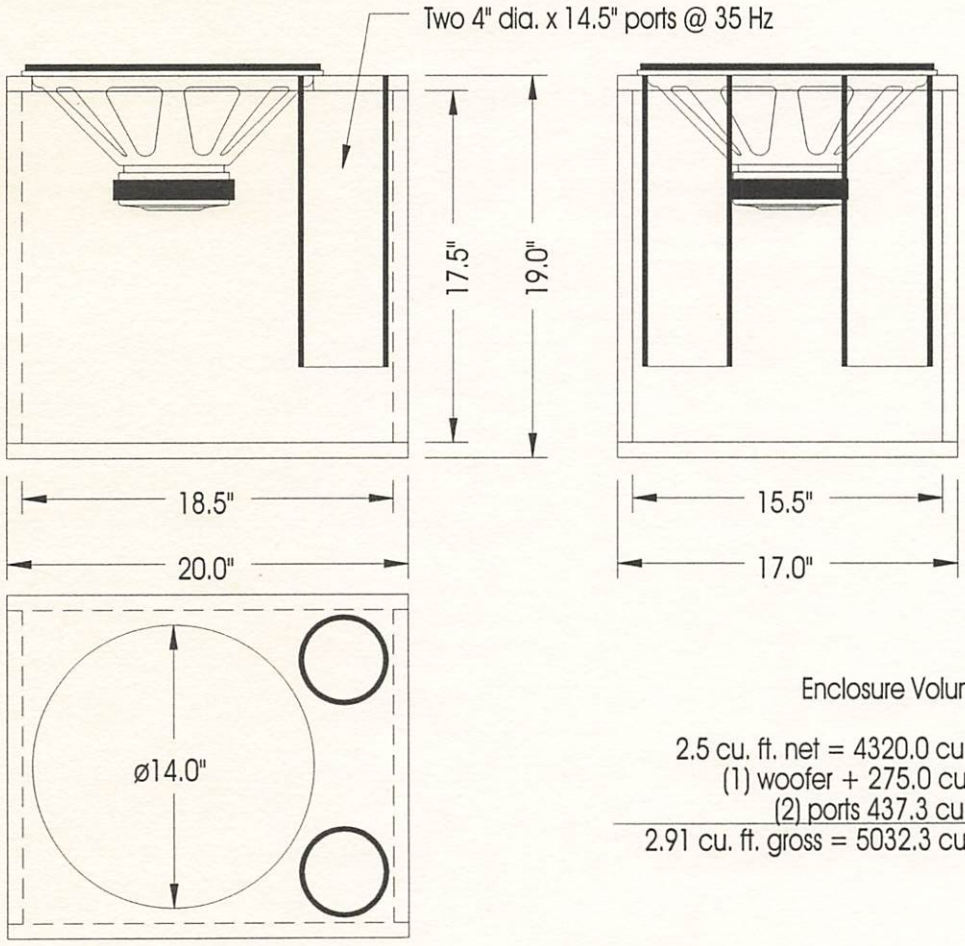

Enclosure Volume:

2.5 cu. ft. net = 4320.0 cu. in.
(1) woofer + 275.0 cu. in.
(2) ports 437.3 cu. in.
2.91 cu. ft. gross = 5032.3 cu. in.

NOTE: Line all walls with fiberglass insulation or similar material!

Predicted In-Car and Half-Space Anechoic Frequency Response

SOUNDSTREAM® TECHNOLOGIES

R & D Loudspeaker Performance Projection
SPL vs. Frequency (2.0 volts input / 1 meter)
Response includes 12 dB / Oct LP @ 100 Hz

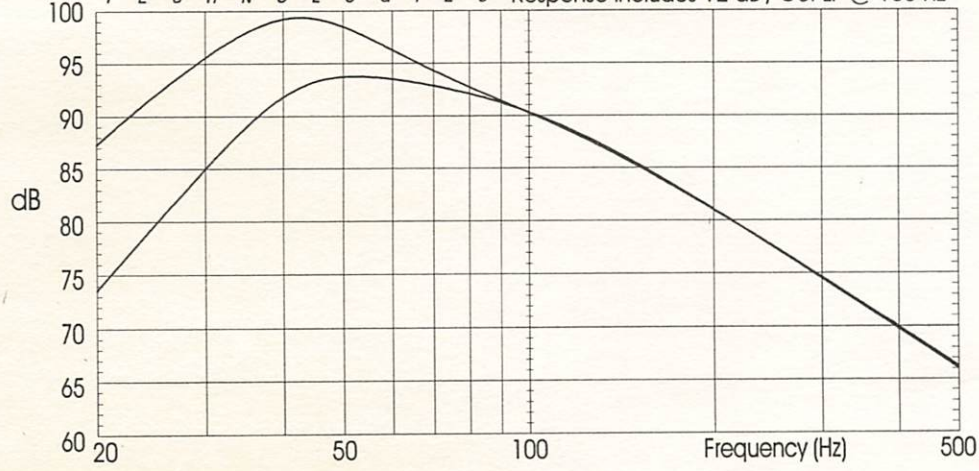

Application Notes:

- _____
- _____
- _____
- _____
- _____
- _____
- _____

CODE: GR15MK2EN3

SOUNDSTREAM®
TECHNOLOGIES

Woofer: Granite Pro15mkII
Enclosure Type: Vented
Music Type: Very good all around enclosure

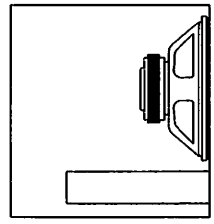

5.03 cu. ft. o.d.

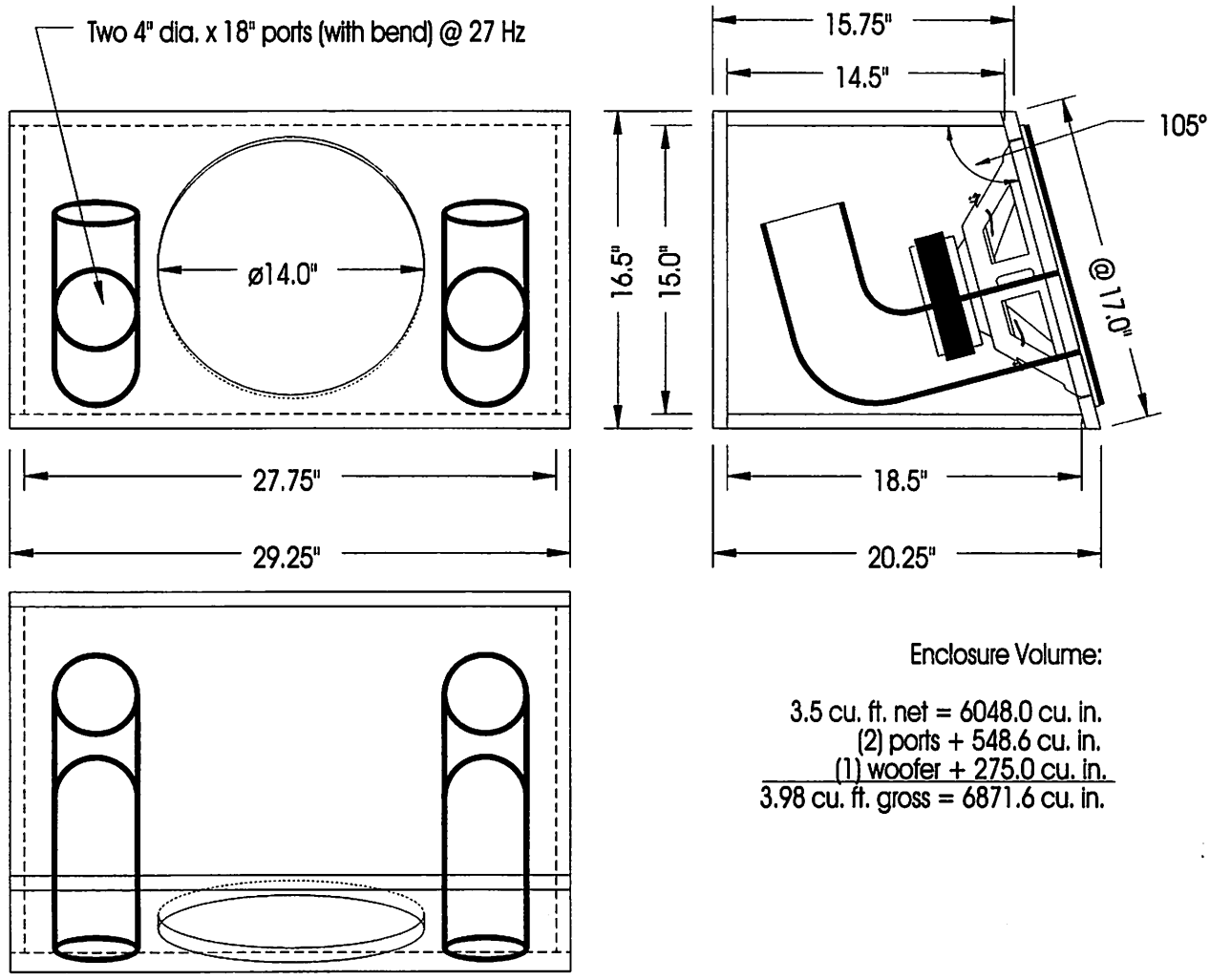

Enclosure Volume:

3.5 cu. ft. net = 6048.0 cu. in.
(2) ports + 548.6 cu. in.
(1) woofer + 275.0 cu. in.
3.98 cu. ft. gross = 6871.6 cu. in.

NOTE: Line all walls with fiberglass insulation or similar material!

Predicted In-Car and Half-Space Anechoic Frequency Response

SOUNDSTREAM® TECHNOLOGIES
R & D Loudspeaker Performance Projection
SPL vs. Frequency (2.0 volts input / 1 meter)
Response includes 12 dB / Oct LP @ 100 Hz

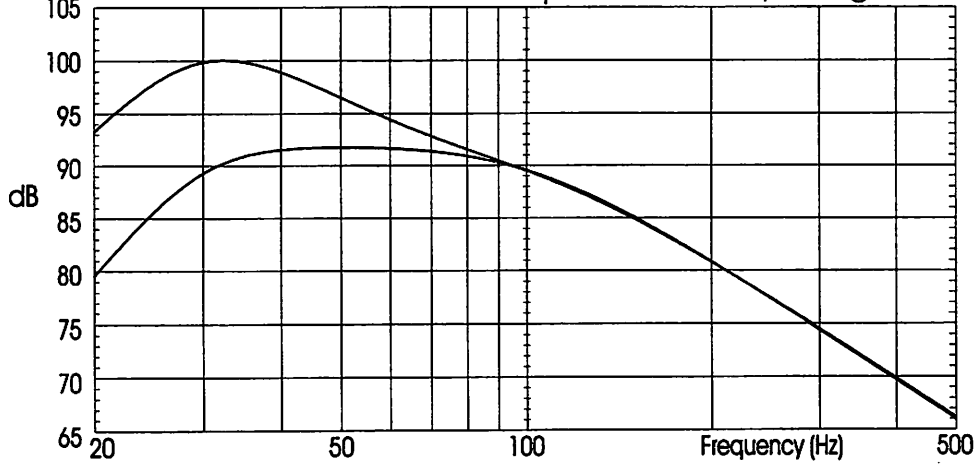

Application Notes:

- _____
- _____
- _____
- _____
- _____
- _____
- _____

CODE: GR15MK2EN4

SOUNDSTREAM®
TECHNOLOGIES

Woofer: Granite Pro15mkII
Enclosure Type: Sealed Bandpass #59
Music Type: High output for Rock and Rap

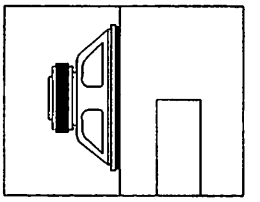

5.99 cu. ft. o.d.

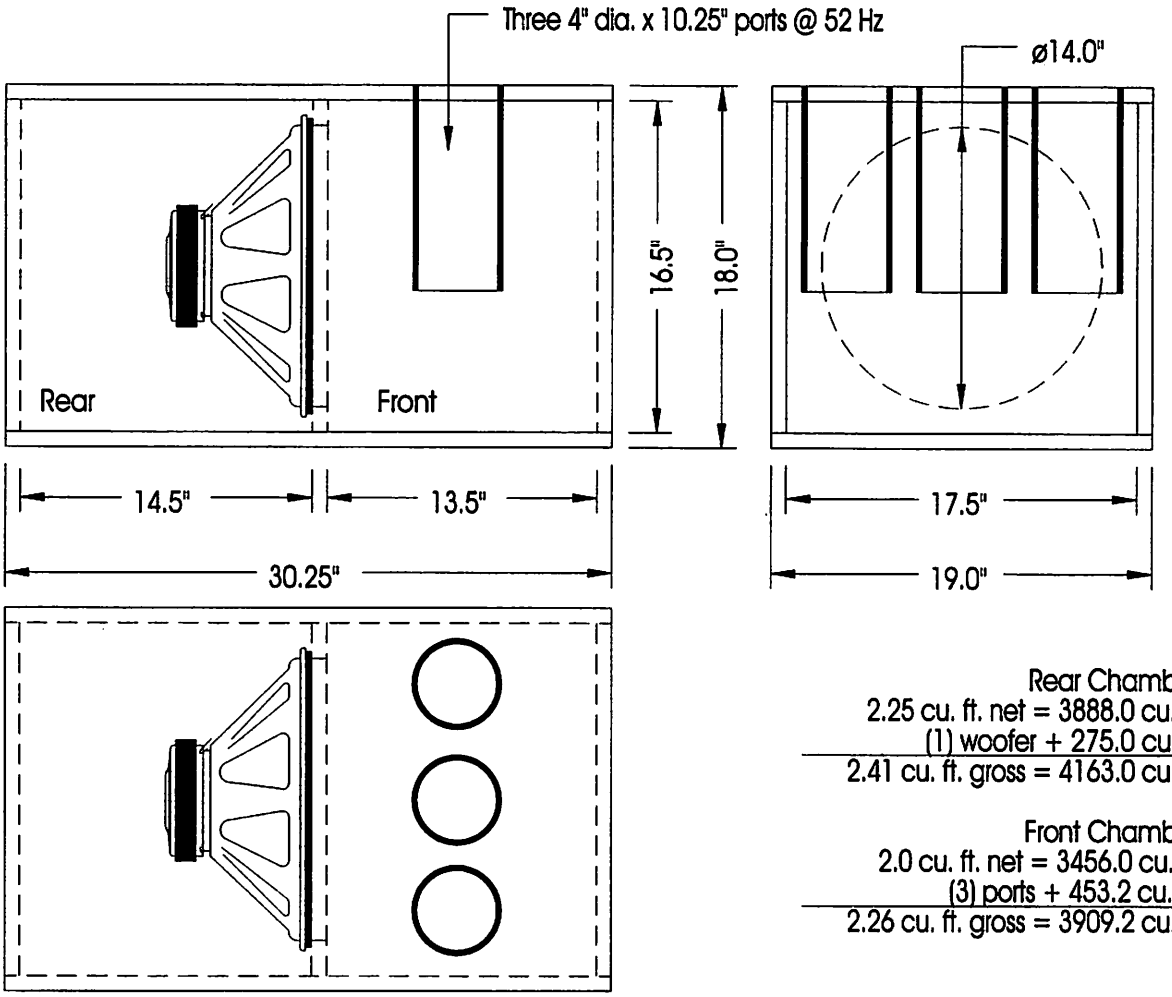

Rear Chamber:
2.25 cu. ft. net = 3888.0 cu. in.
(1) woofer + 275.0 cu. in.
2.41 cu. ft. gross = 4163.0 cu. in.

Front Chamber:
2.0 cu. ft. net = 3456.0 cu. in.
(3) ports + 453.2 cu. in.
2.26 cu. ft. gross = 3909.2 cu. in.

NOTE: Line all walls with fiberglass insulation or similar material!

Predicted In-Car and Half-Space Anechoic Frequency Response

SOUNDSTREAM® TECHNOLOGIES
R & D Loudspeaker Performance Projection
SPL vs. Frequency (2.0 volts input / 1 meter)
Response includes 12 dB / Oct LP @ 100 Hz

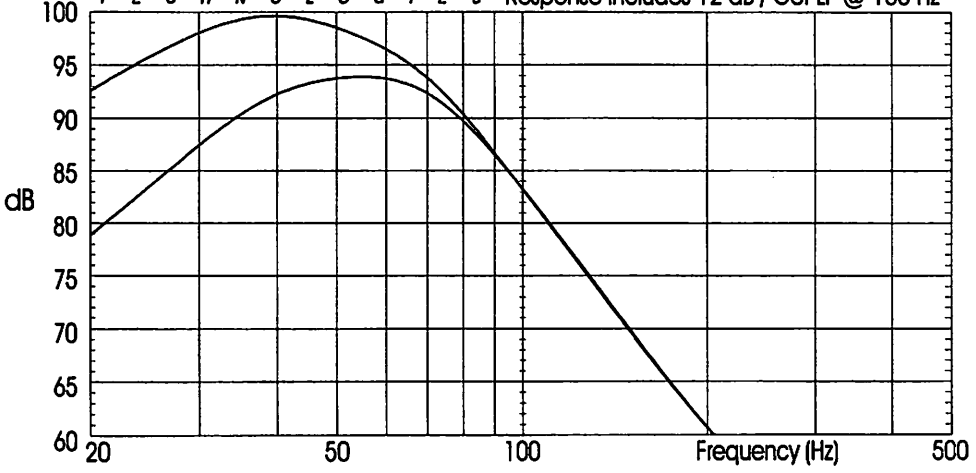

Application Notes:

CODE: GR15MK2EN5

SOUNDSTREAM®
TECHNOLOGIES

Woofer: Granite Pro15mkII
Enclosure Type: Sealed Bandpass #60
Music Type: Very high output for Rap music

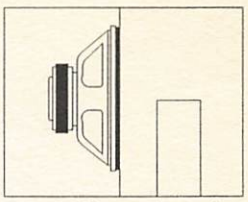
4.79 cu. ft. o.d.

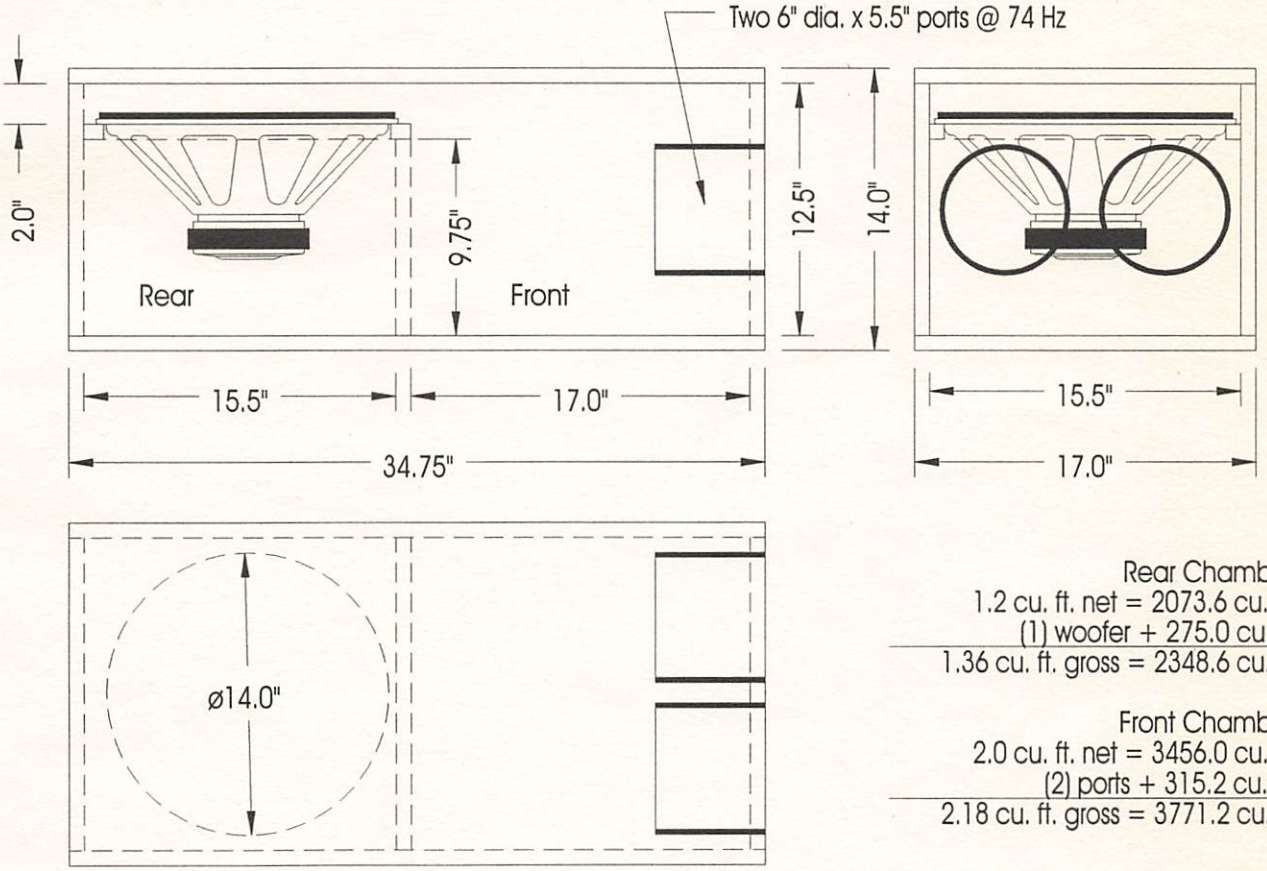

Rear Chamber:
1.2 cu. ft. net = 2073.6 cu. in.
(1) woofer + 275.0 cu. in.
1.36 cu. ft. gross = 2348.6 cu. in.

Front Chamber:
2.0 cu. ft. net = 3456.0 cu. in.
(2) ports + 315.2 cu. in.
2.18 cu. ft. gross = 3771.2 cu. in.

NOTE: Line all walls with fiberglass insulation or similar material!

Predicted In-Car and Half-Space Anechoic Frequency Response
SOUNDSTREAM® TECHNOLOGIES
R & D Loudspeaker Performance Projection
SPL vs. Frequency (2.0 volts input / 1 meter)
Response includes 12 dB / Oct LP @ 100 Hz

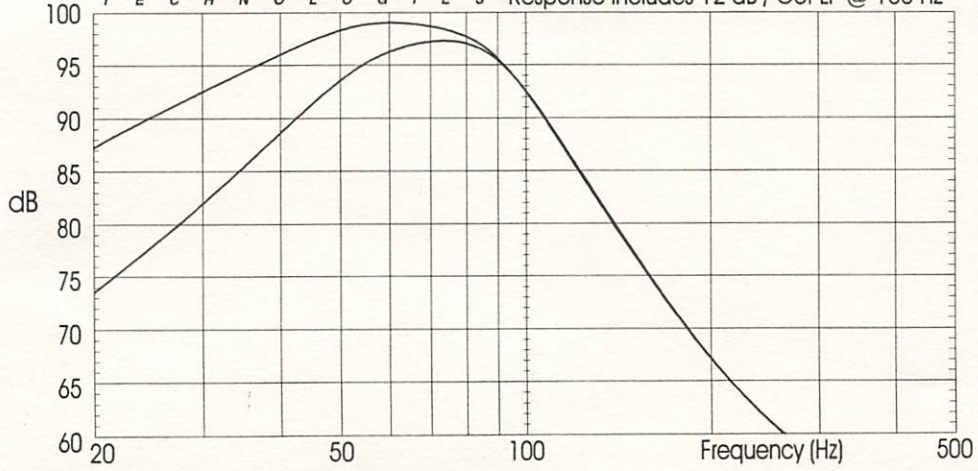

Application Notes:

- _____
- _____
- _____
- _____
- _____
- _____
- _____

CODE: GR15MK2EN6

SOUNDSTREAM®

TECHNOLOGIES

Woofer: SPL10

Enclosure Type: Sealed

Music Type: Good linear response, excellent small enclosure.

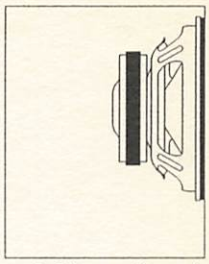

0.91 cu. ft. o.d.

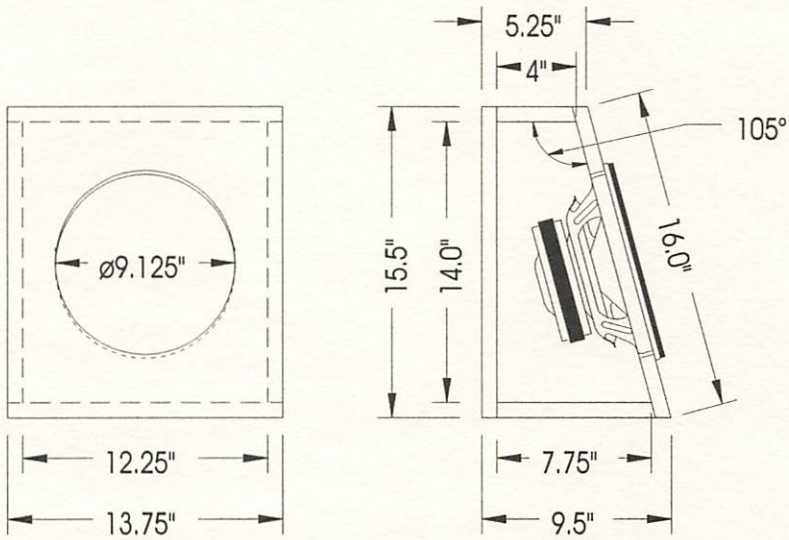

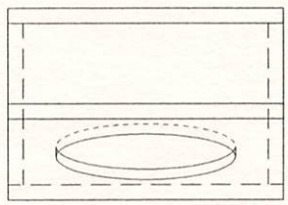

VOLUME:

0.50 cu. ft. net = 864.0 cu. in.
(1) woofer + 135.0 cu. in.
0.58 cu. ft. gross = 999.0 cu. in.

NOTE: Line all walls with 1" fiberglass insulation or similar material!

Predicted In-Car and Half-Space Anechoic Frequency Response

SOUNDSTREAM® TECHNOLOGIES

R & D Loudspeaker Performance Projection
SPL vs. Frequency (2.0 volts input / 1 meter)
Response includes 12 dB / Oct LP @ 100 Hz

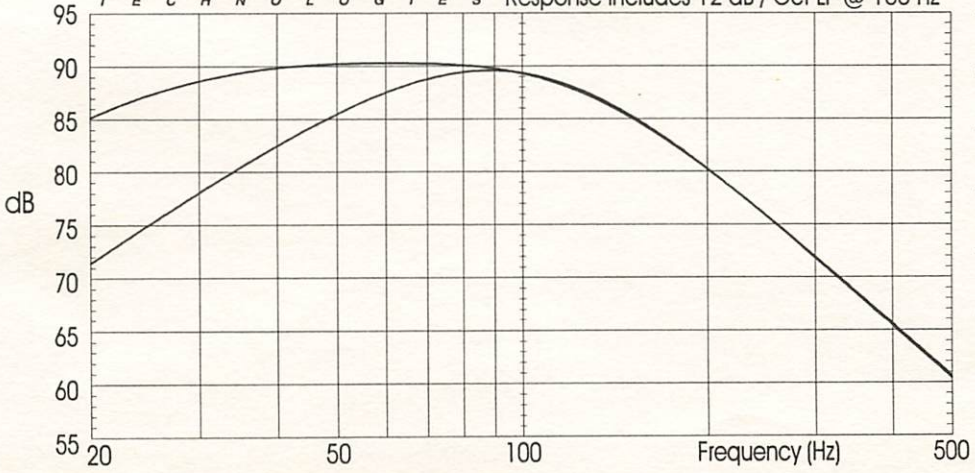

Application Notes:

- _____
- _____
- _____
- _____
- _____
- _____
- _____

CODE: SPL10EN1

SOUNDSTREAM®

TECHNOLOGIES

Woofer: SPL10
Enclosure Type: Sealed
Music Type: Good linear response, excellent all around enclosure.

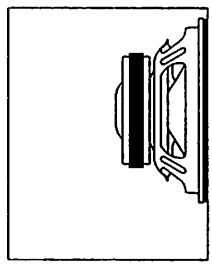

1.26 cu. ft. o.d.

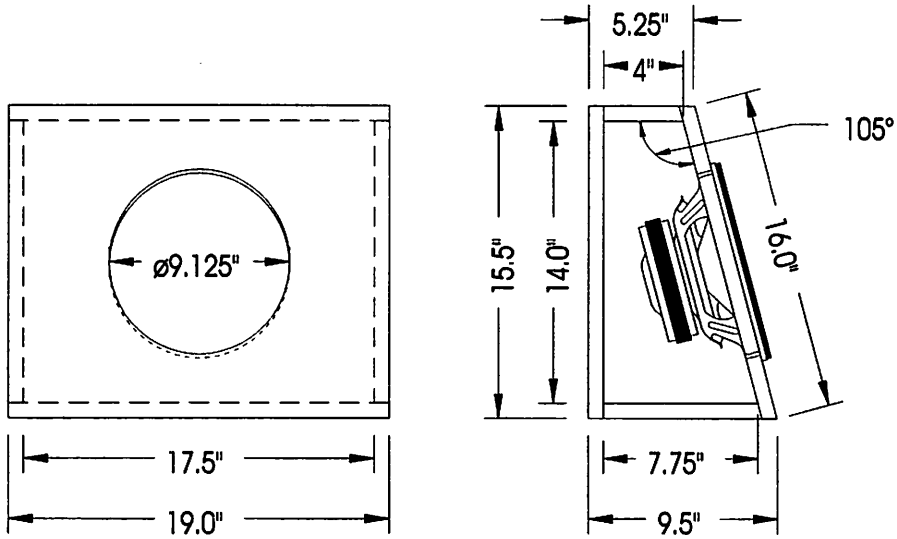

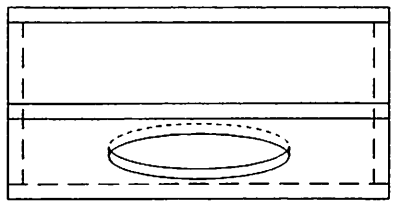

VOLUME:

0.75 cu. ft. net = 1296.0 cu. in.
(1) woofer + 135.0 cu. in.
0.83 cu. ft. gross = 1431.0 cu. in.

NOTE: Line all walls with 1" fiberglass insulation or similar material!

Predicted In-Car and Half-Space Anechoic Frequency Response

SOUNDSTREAM® TECHNOLOGIES R & D Loudspeaker Performance Projection
SPL vs. Frequency (2.0 volts input / 1 meter)
Response Includes 12 dB / Oct LP @ 100 Hz

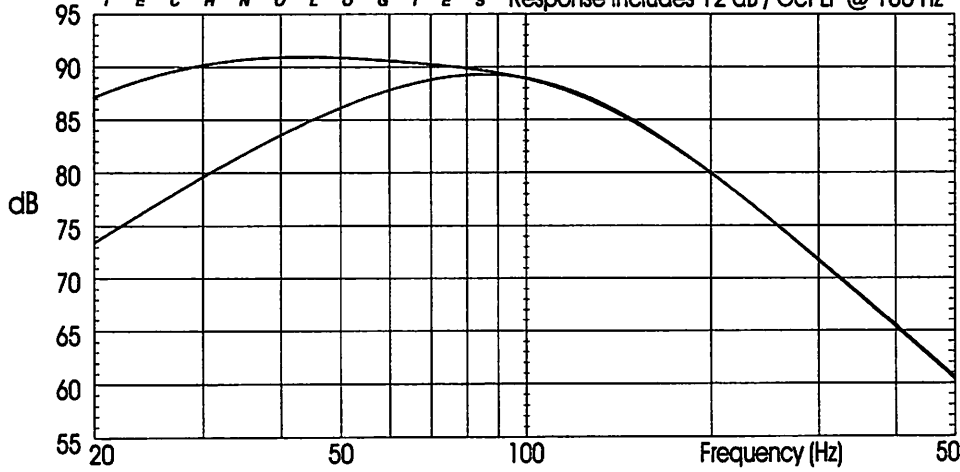

Application Notes:

CODE: SPL10EN2

SOUNDSTREAM®
TECHNOLOGIES

Woofer: SPL10
Enclosure Type: Sealed
Music Type: Great for high SPL, multiple driver applications.

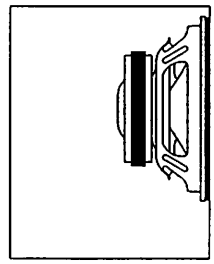

1.55 cu. ft. o.d.

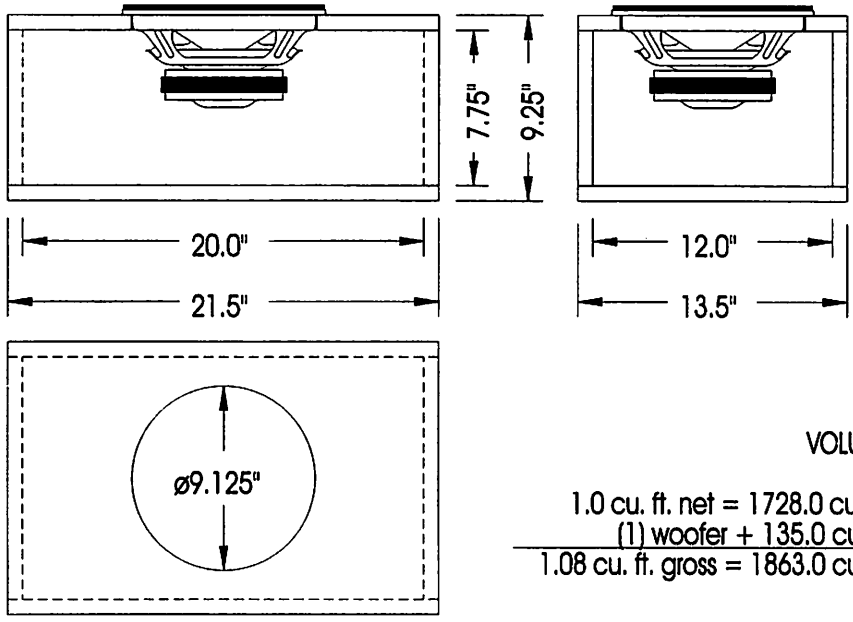

VOLUME:

1.0 cu. ft. net = 1728.0 cu. in.
(1) woofer + 135.0 cu. in.
1.08 cu. ft. gross = 1863.0 cu. in.

NOTE: Line all walls with 1" fiberglass insulation or similar material!

Predicted In-Car and Half-Space Anechoic Frequency Response

SOUNDSTREAM® TECHNOLOGIES
R & D Loudspeaker Performance Projection
SPL vs. Frequency (2.0 volts input / 1 meter)
Response includes 12 dB / Oct LP @ 100 Hz

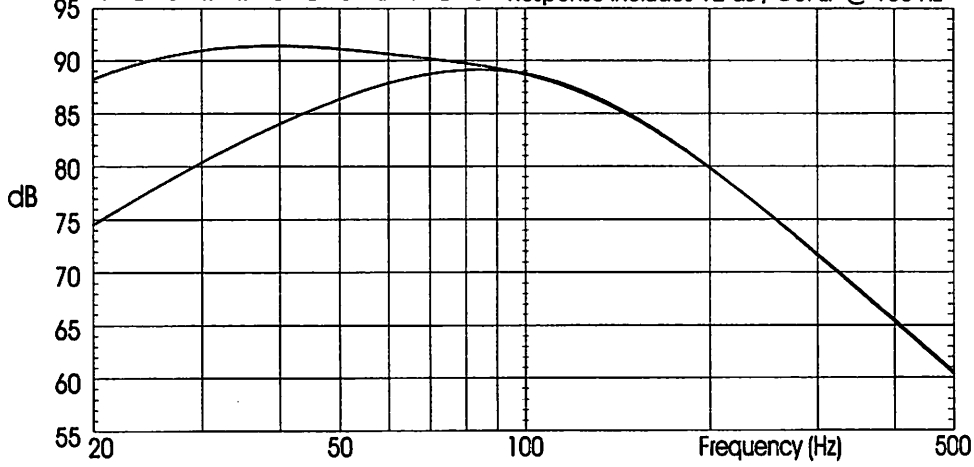

Application Notes:

CODE: SPL10EN3

SOUNDSTREAM®
TECHNOLOGIES

Woofer: SPL10
Enclosure Type: Vented
Music Type: High output; great for Rock music

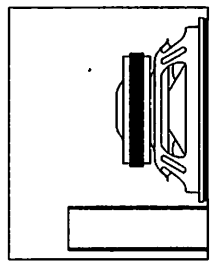
1.70 cu. ft. o.d.

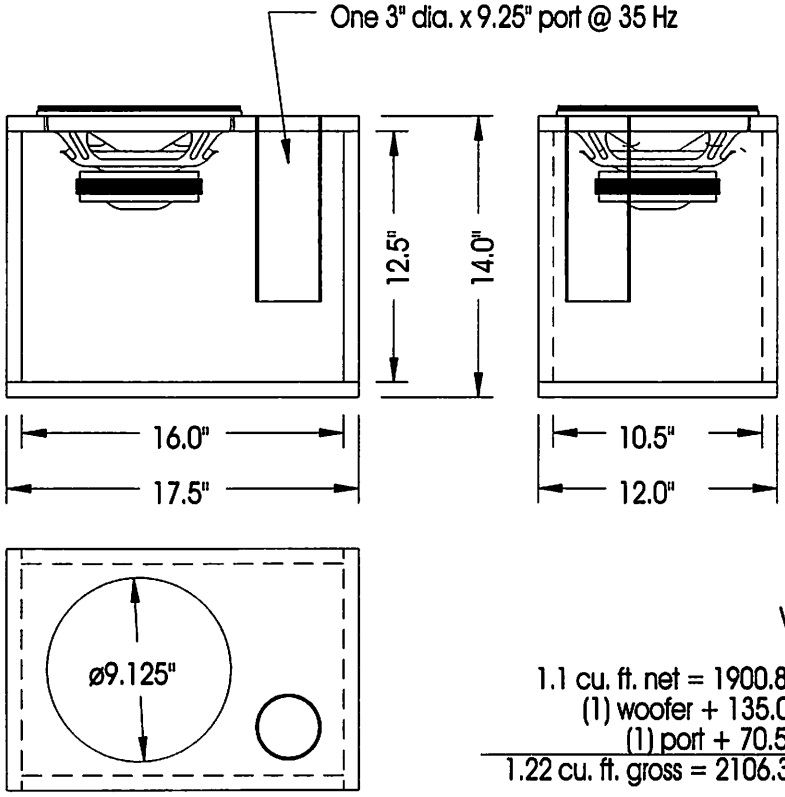

VOLUME

1.1 cu. ft. net = 1900.8 cu. in.
(1) woofer + 135.0 cu. in.
(1) port + 70.5 cu. in.
1.22 cu. ft. gross = 2106.3 cu. in.

NOTE: Line all walls with fiberglass insulation or similar material!

Predicted In-Car and Half-Space Anechoic Frequency Response
SOUNDSTREAM® TECHNOLOGIES
R & D Loudspeaker Performance Projection
SPL vs. Frequency (2.0 volts input / 1 meter)
Response includes 12 dB / Oct LP @ 100 Hz

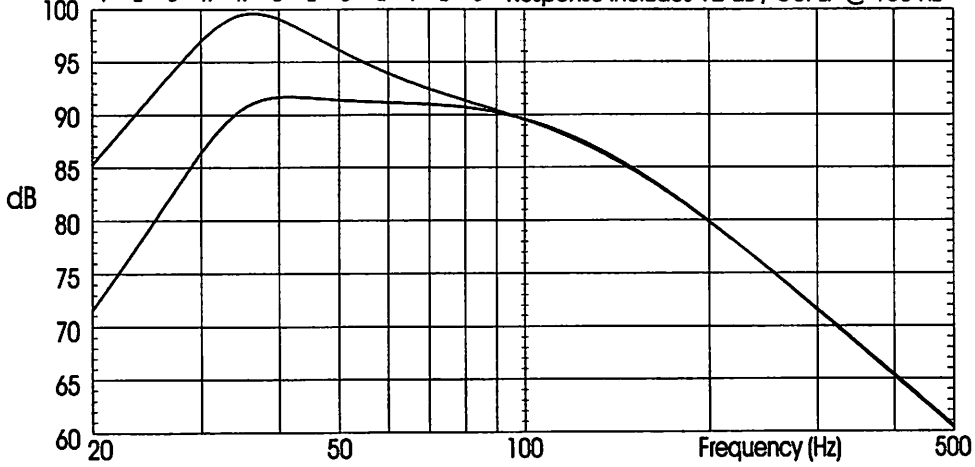

Application Notes:

CODE: SPL10EN5

SOUNDSTREAM®
TECHNOLOGIES

Woofer: SPL10
Enclosure Type: Vented
Music Type: High output with good low frequency extension.

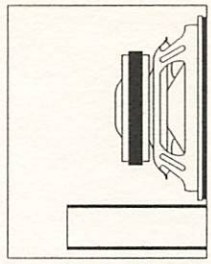
1.35 cu. ft. o.d.

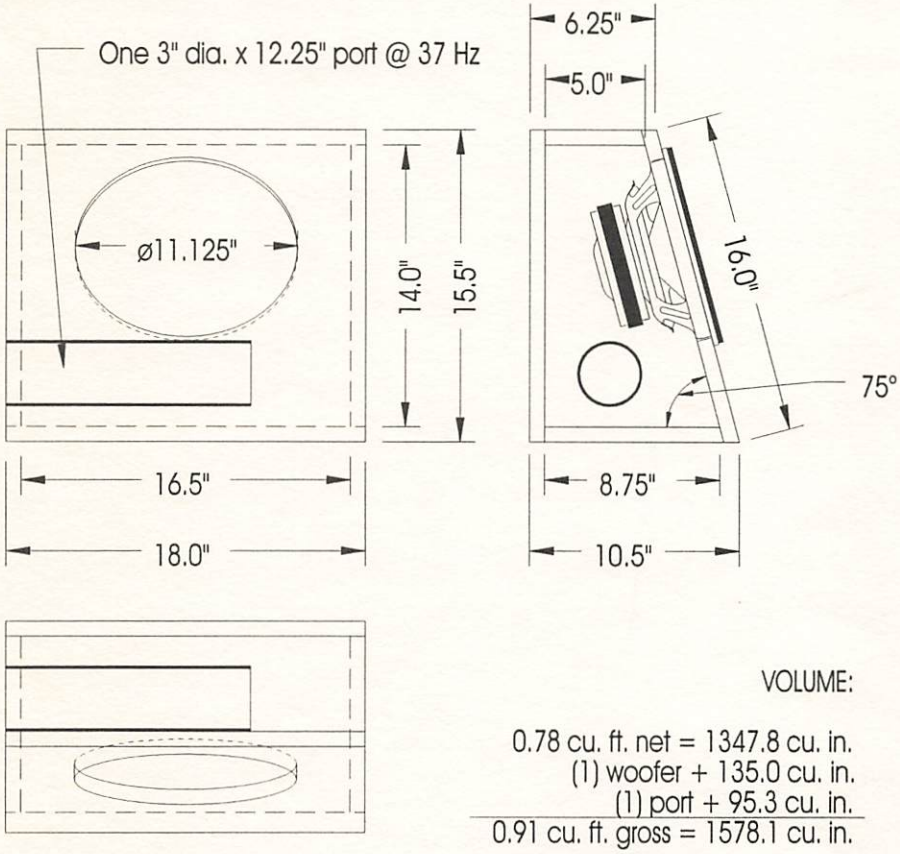

VOLUME:

0.78 cu. ft. net = 1347.8 cu. in.
(1) woofer + 135.0 cu. in.
(1) port + 95.3 cu. in.
0.91 cu. ft. gross = 1578.1 cu. in.

NOTE: Line all walls with 1" fiberglass insulation or similar material!

Predicted In-Car and Half-Space Anechoic Frequency Response
SOUNDSTREAM® TECHNOLOGIES
R & D Loudspeaker Performance Projection
SPL vs. Frequency (2.0 volts input / 1 meter)
Response includes 12 dB / Oct LP @ 100 Hz

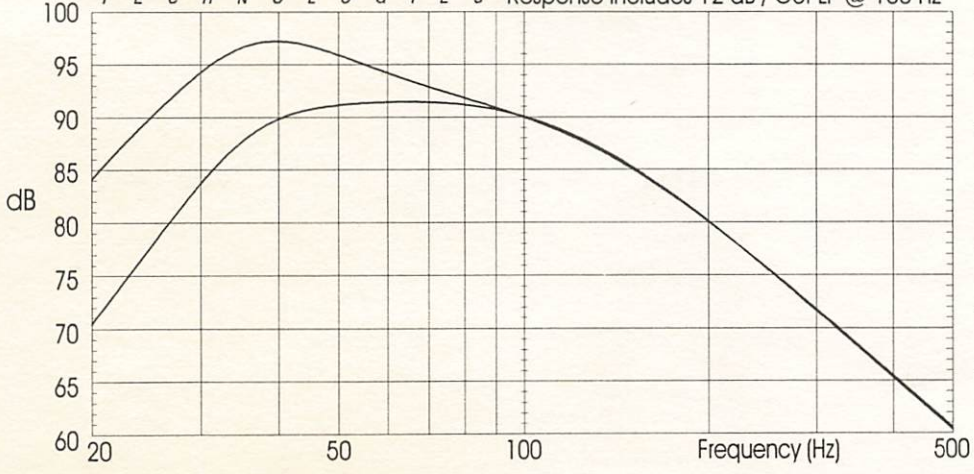

Application Notes:

CODE: SPL10EN4

SOUNDSTREAM®
TECHNOLOGIES

Woofer: SPL10
Enclosure Type: Sealed Bandpass #50
Music Type: Very high output for Rock or Rap

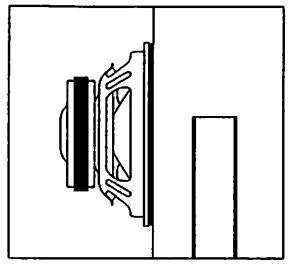

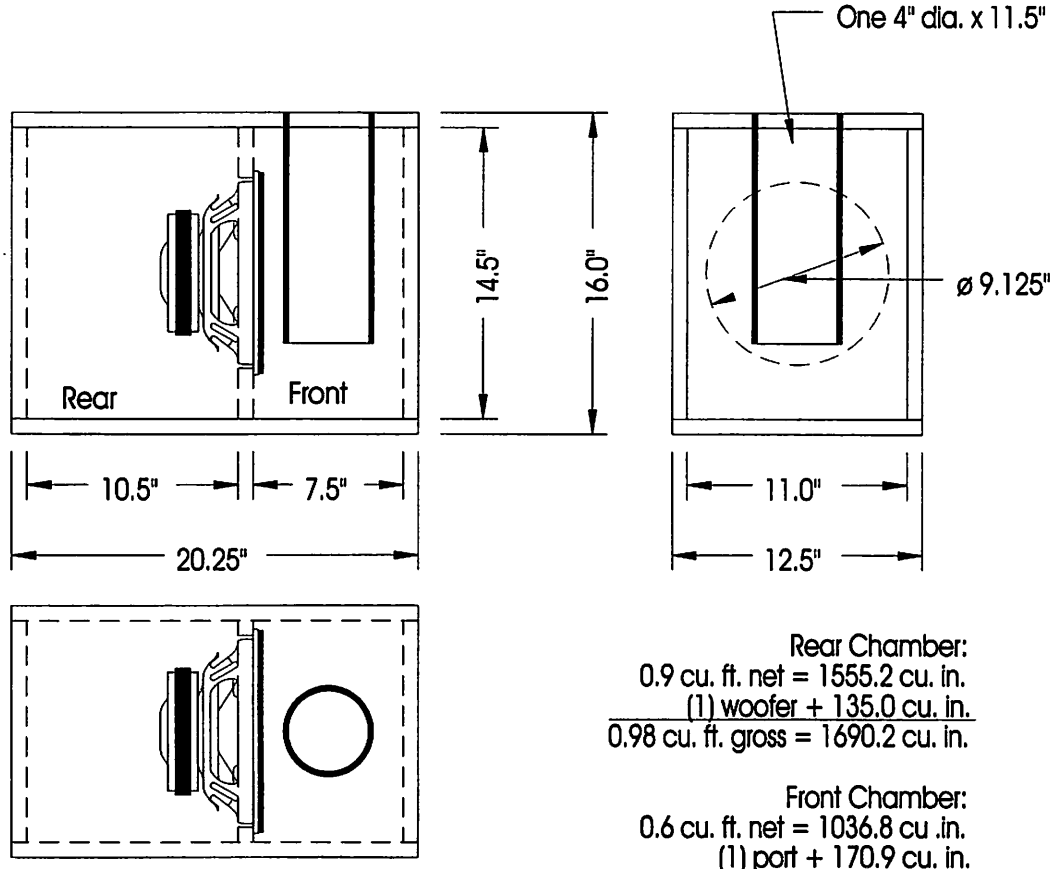

Rear Chamber:
0.9 cu. ft. net = 1555.2 cu. in.
(1) woofer + 135.0 cu. in.
0.98 cu. ft. gross = 1690.2 cu. in.

Front Chamber:
0.6 cu. ft. net = 1036.8 cu .in.
(1) port + 170.9 cu. in.
0.70 cu. ft. gross = 1207.7 cu. in.

NOTE: Line all walls with 1" fiberglass insulation or similar material!

Predicted In-Car and Half-Space Anechoic Frequency Response
SOUNDSTREAM® TECHNOLOGIES
R & D Loudspeaker Performance Projection
SPL vs. Frequency (2.0 volts input / 1 meter)
Response includes 12 dB / Oct LP @ 100 Hz

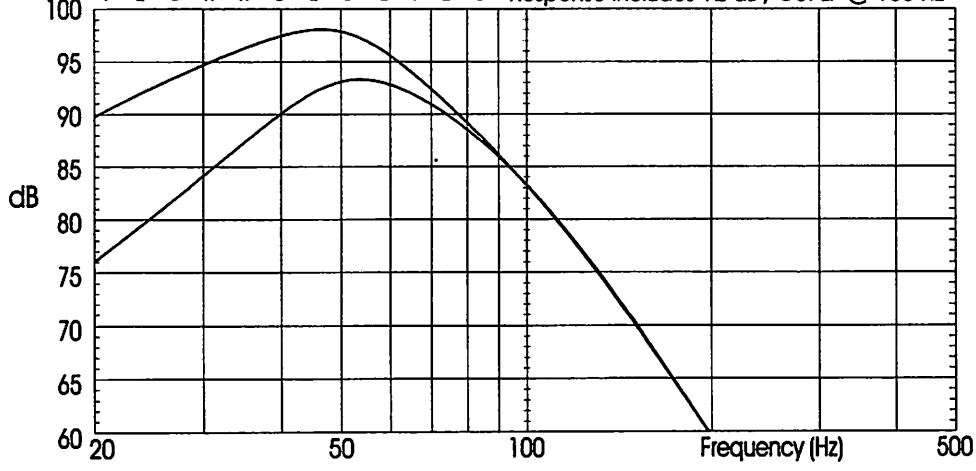

Application Notes:

- _____
- _____
- _____
- _____
- _____
- _____
- _____

CODE: SPL10EN6

SOUNDSTREAM®
TECHNOLOGIES

Woofer: SPL10
Enclosure Type: Sealed Bandpass #51
Music Type: High ouput small enclosure for Rock or Rap

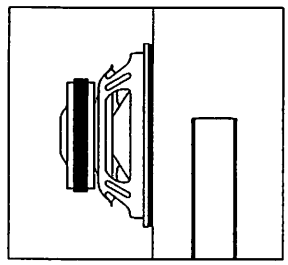
1.56 cu. ft. o.d.

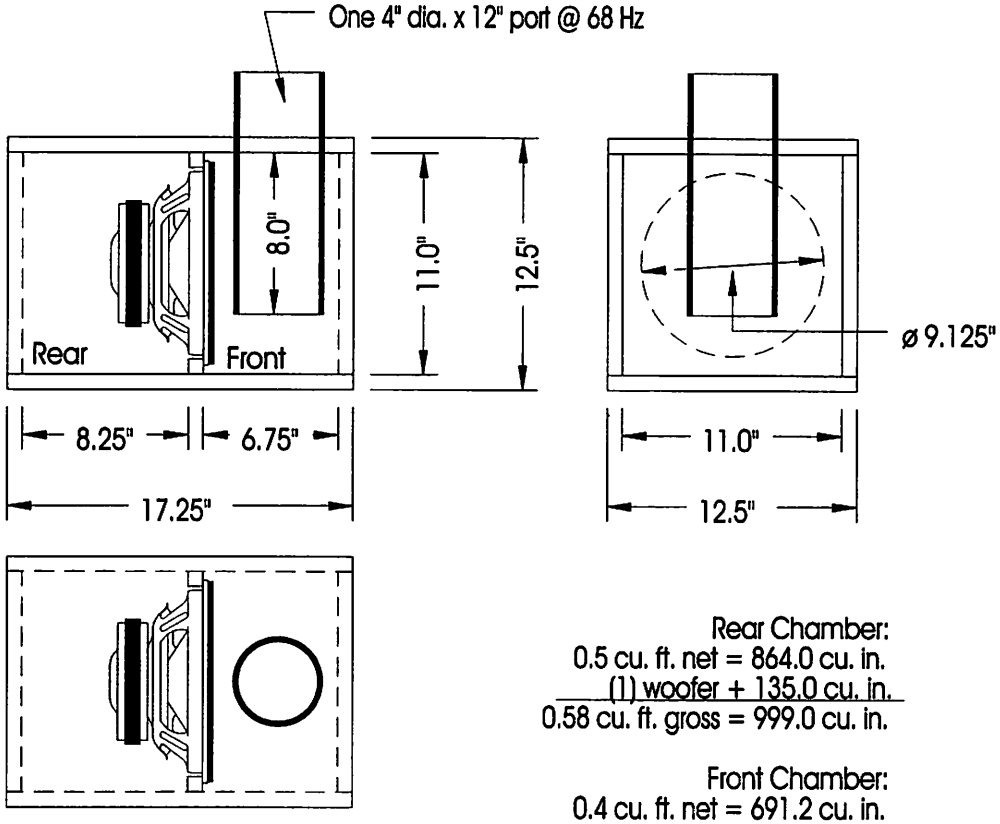

Rear Chamber:
0.5 cu. ft. net = 864.0 cu. in.
(1) woofer + 135.0 cu. in.
0.58 cu. ft. gross = 999.0 cu. in.

Front Chamber:
0.4 cu. ft. net = 691.2 cu. in.
(length in box) port + 127.2 cu. in.
0.47 cu. ft. gross = 818.4 cu. in.

NOTE: Line all walls with 1" fiberglass insulation or similar material!

Suggestion: Vent the port through the rear deck of the vehicle.

Predicted In-Car and Half-Space Anechoic Frequency Response
SOUNDSTREAM® TECHNOLOGIES
R & D Loudspeaker Performance Projection
SPL vs. Frequency (2.0 volts input / 1 meter)
Response includes 12 dB / Oct LP @ 100 Hz

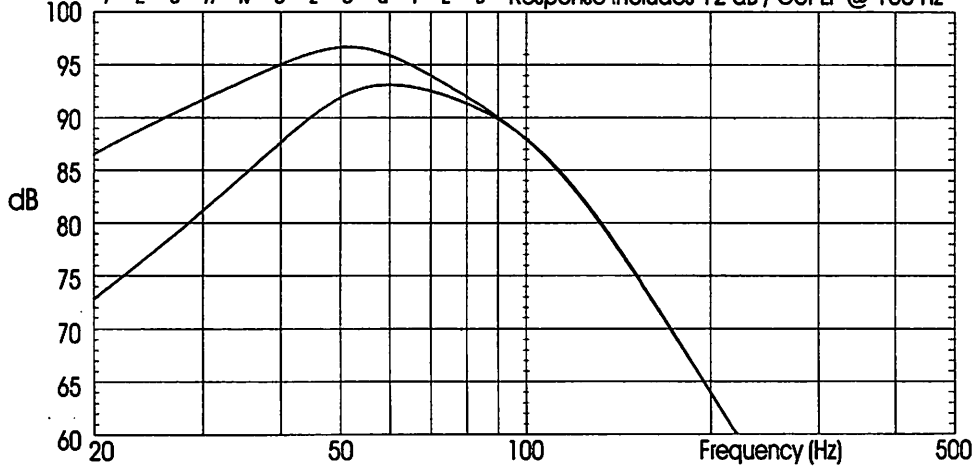

Application Notes:

CODE: SPL10EN7

SOUNDSTREAM®

TECHNOLOGIES

Woofer: SPL12
Enclosure Type: Sealed
Music Type: Good linear response, excellent small enclosure.

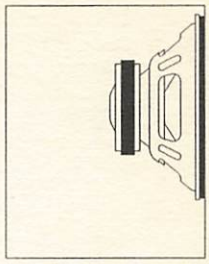

1.62 cu. ft. o.d.

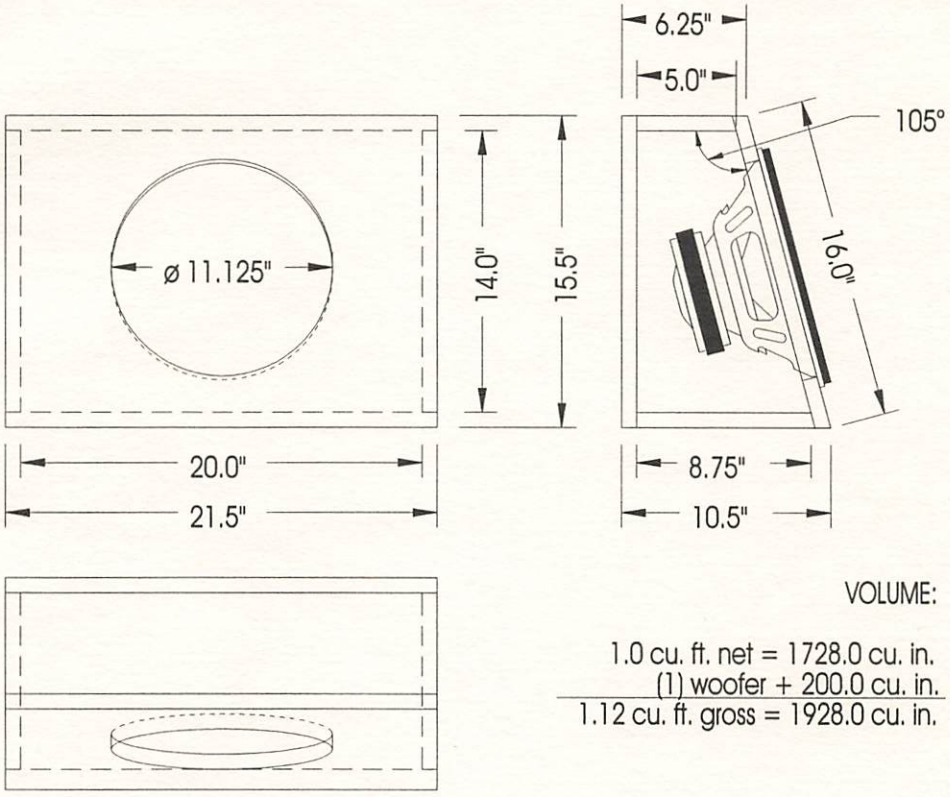

VOLUME:

1.0 cu. ft. net = 1728.0 cu. in.
(1) woofer + 200.0 cu. in.
1.12 cu. ft. gross = 1928.0 cu. in.

NOTE: Line all walls with 1" fiberglass insulation or similar material!

Predicted In-Car and Half-Space Anechoic Frequency Response

SOUNDSTREAM® TECHNOLOGIES

R & D Loudspeaker Performance Projection
SPL vs. Frequency (2.0 volts input / 1 meter)
Response includes 12 dB / Oct LP @ 100 Hz

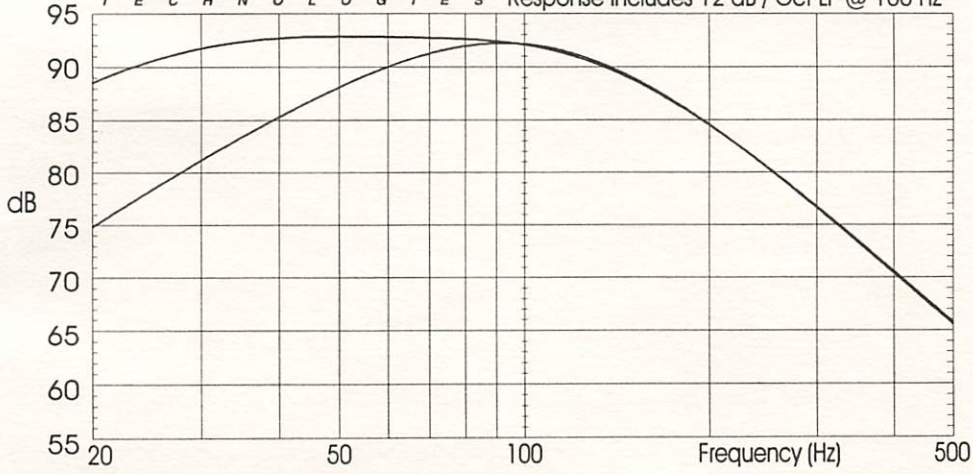

Application Notes:

-
-
-
-
-
-
-

CODE: SPL12EN1

SOUNDSTREAM®

TECHNOLOGIES

Woofer: SPL12
Enclosure Type: Sealed
Music Type: Excellent all around enclosure

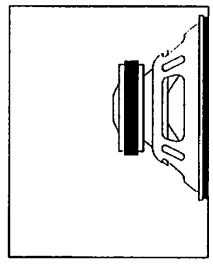

2.23 cu. ft. o.d.

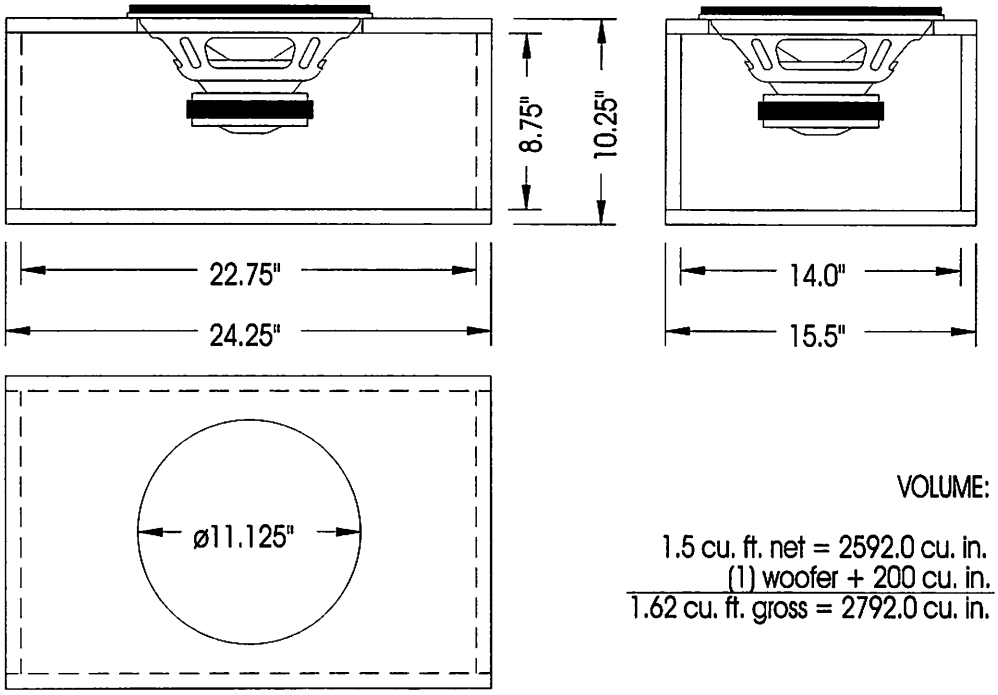

VOLUME:

1.5 cu. ft. net = 2592.0 cu. in.
(1) woofer + 200 cu. in.
1.62 cu. ft. gross = 2792.0 cu. in.

NOTE: Line all walls with 1" fiberglass insulation or similar material!

Predicted In-Car and Half-Space Anechoic Frequency Response

SOUNDSTREAM® TECHNOLOGIES

R & D Loudspeaker Performance Projection
SPL vs. Frequency (2.0 volts input / 1 meter)
Response includes 12 dB / Oct LP @ 100 Hz

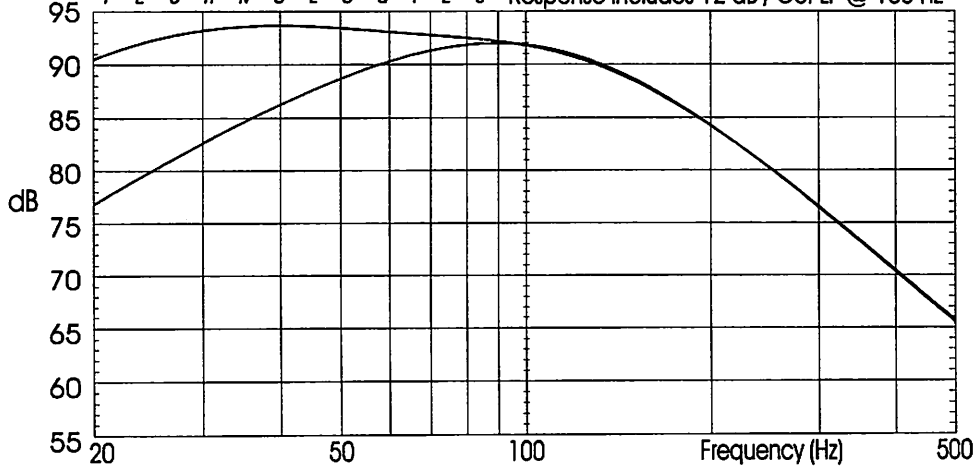

Application Notes:

CODE: SPL12EN2

SOUNDSTREAM®

TECHNOLOGIES

Woofer: SPL12

Enclosure Type: Vented

Music Type: Good low frequency extension; good all around enclosure

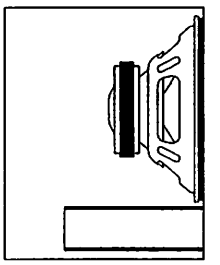

1.76 cu. ft. o.d.

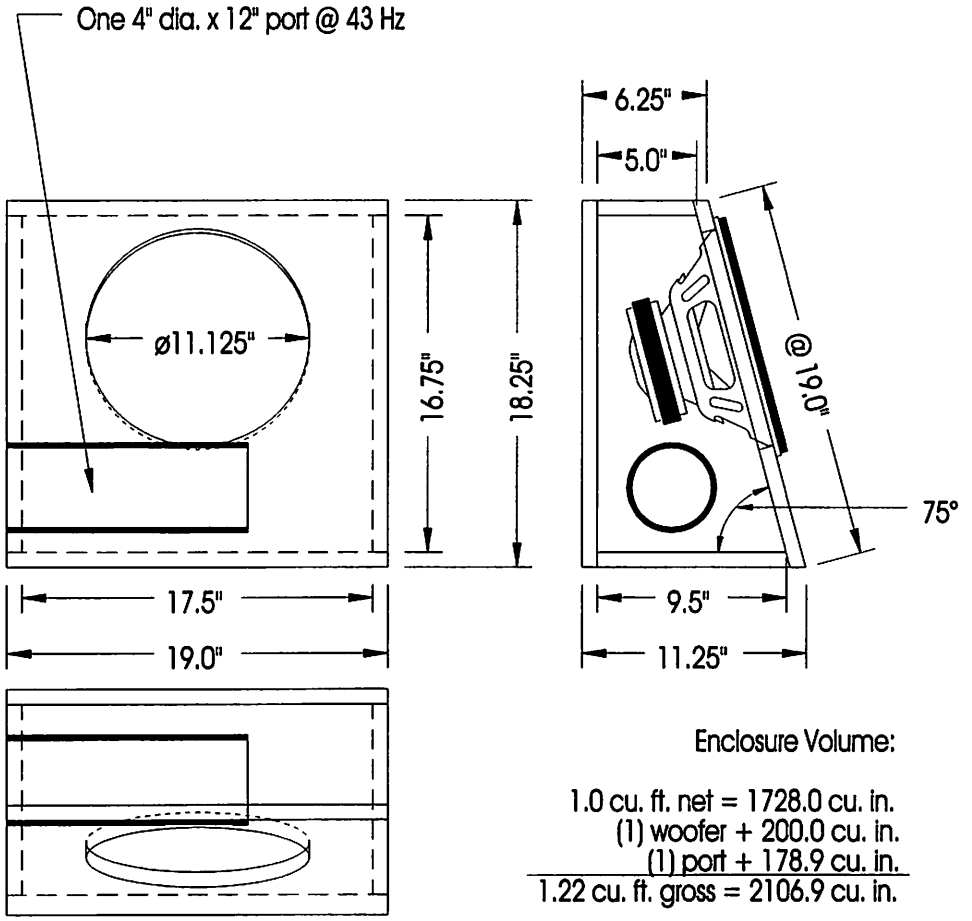

Enclosure Volume:

1.0 cu. ft. net = 1728.0 cu. in.
(1) woofer + 200.0 cu. in.
(1) port + 178.9 cu. in.
1.22 cu. ft. gross = 2106.9 cu. in.

NOTE: Line all walls with 1" fiberglass insulation or similar material!

Predicted In-Car and Half-Space Anechoic Frequency Response

SOUNDSTREAM® TECHNOLOGIES

R & D Loudspeaker Performance Projection
SPL vs. Frequency (2.0 volts input / 1 meter)
Response includes 12 dB / Oct LP @ 100 Hz

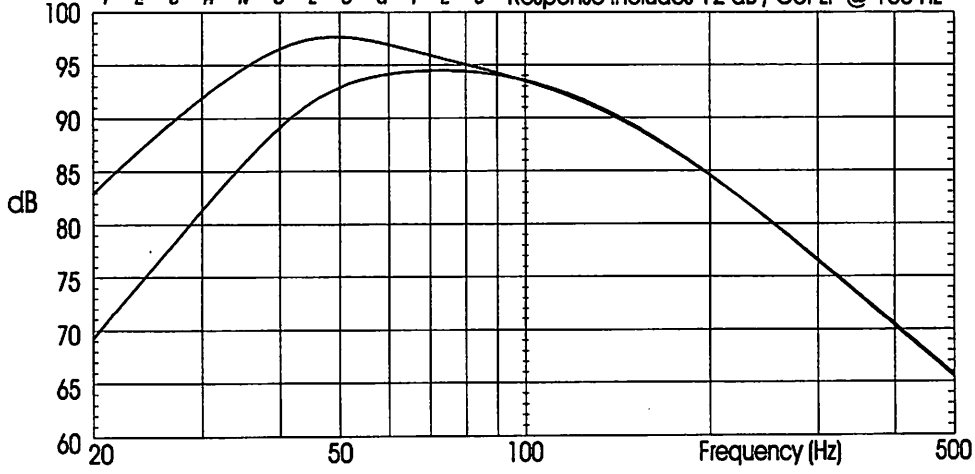

Application Notes:

-
-
-
-
-
-
-

CODE: SPL12EN3

SOUNDSTREAM®
TECHNOLOGIES

Woofer: SPL12
Enclosure Type: Vented
Music Type: Great for Rock or Rap

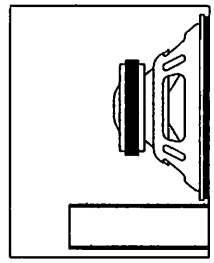
3.00 cu. ft. o.d.

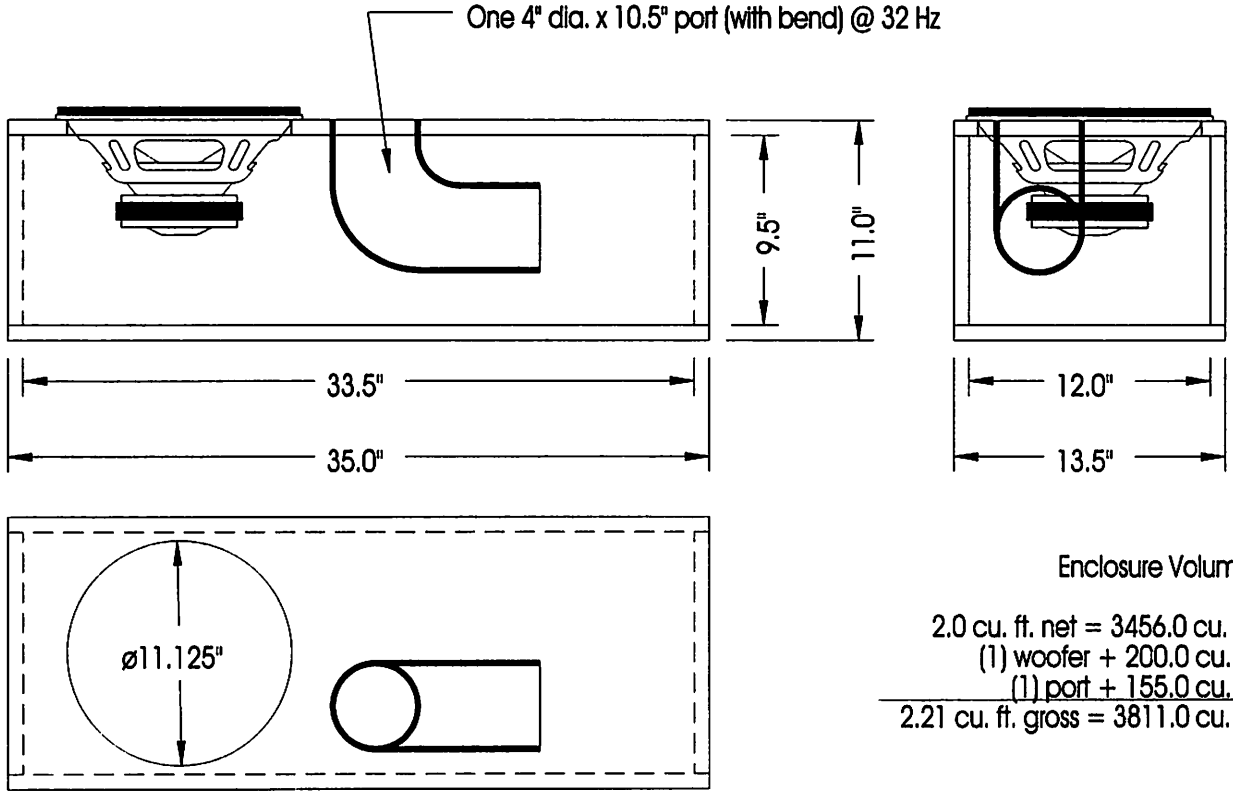

Enclosure Volume:

2.0 cu. ft. net = 3456.0 cu. in.
(1) woofer + 200.0 cu. in.
(1) port + 155.0 cu. in.
2.21 cu. ft. gross = 3811.0 cu. in.

NOTE: Line all walls with fiberglass insulation or similar material!

Predicted In-Car and Half-Space Anechoic Frequency Response
SOUNDSTREAM® TECHNOLOGIES
R & D Loudspeaker Performance Projection
SPL vs. Frequency (2.0 volts input / 1 meter)
Response includes 12 dB / Oct LP @ 100 Hz

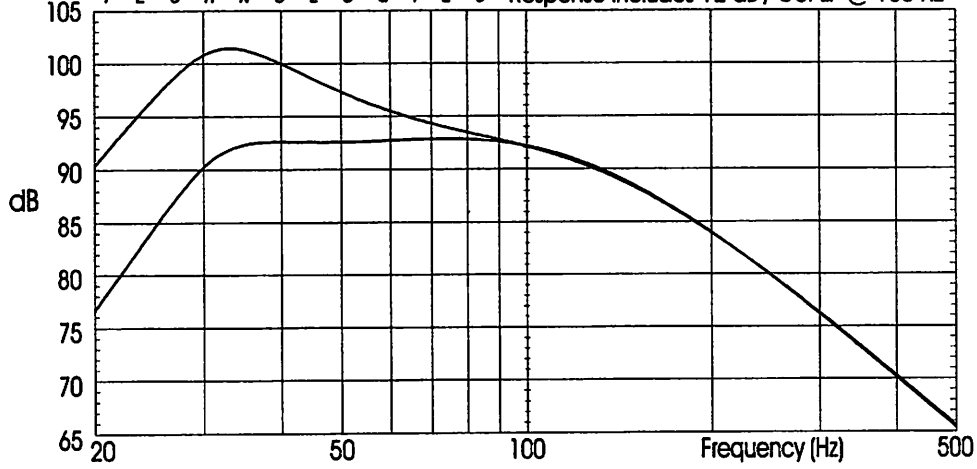

Application Notes:

CODE: SPL12EN4

SOUNDSTREAM®
TECHNOLOGIES

Woofer: SPL12
Enclosure Type: Sealed Bandpass #52
Music Type: High output small enclosure for Rock or Rap

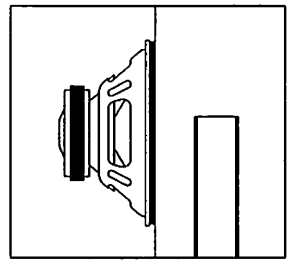
2.24 cu. ft. o.d.

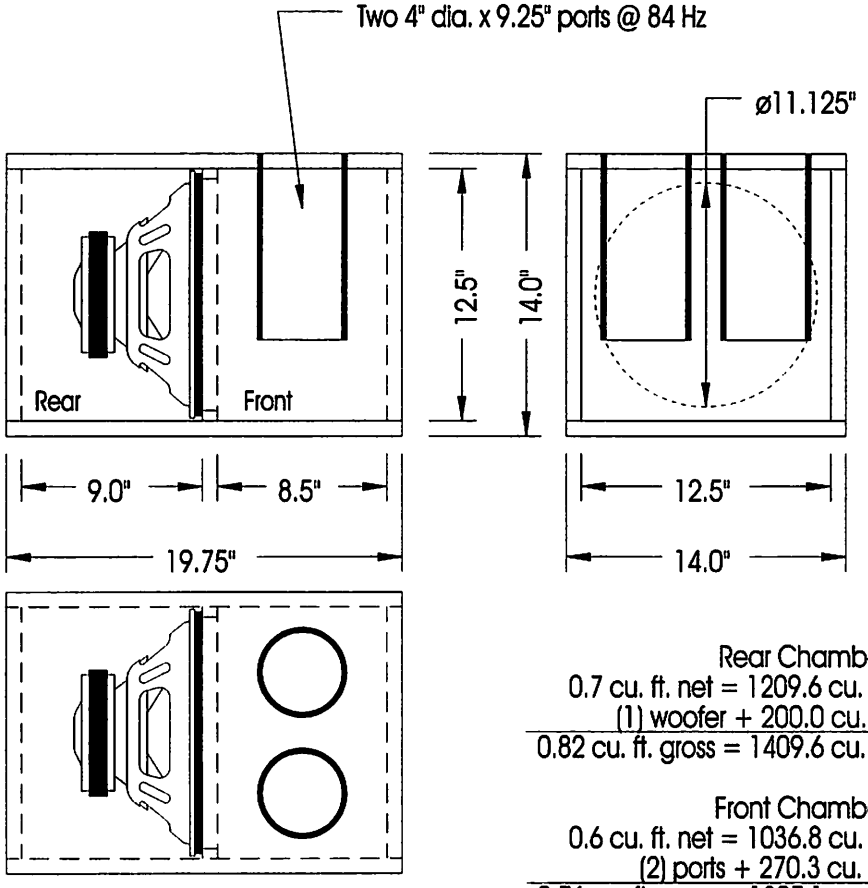

Rear Chamber:
0.7 cu. ft. net = 1209.6 cu. in.
(1) woofer + 200.0 cu. in.
0.82 cu. ft. gross = 1409.6 cu. in.

Front Chamber:
0.6 cu. ft. net = 1036.8 cu. in.
(2) ports + 270.3 cu. in.
0.76 cu. ft. gross = 1307.1 cu. in.

NOTE: Line all walls with 1" fiberglass insulation or similar material!

Predicted In-Car and Half-Space Anechoic Frequency Response
SOUNDSTREAM® TECHNOLOGIES
R & D Loudspeaker Performance Projection
SPL vs. Frequency (2.0 volts input / 1 meter)
Response includes 12 dB / Oct LP @ 100 Hz

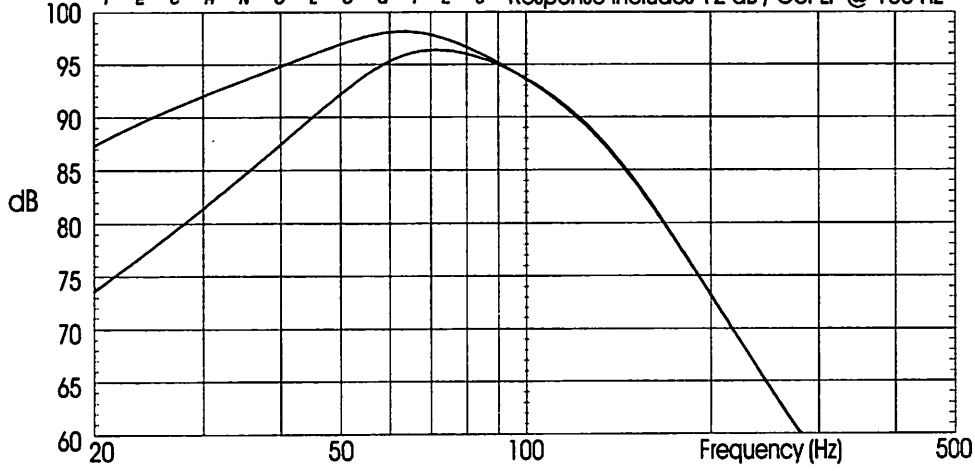

Application Notes:

CODE: SPL12EN5

SOUNDSTREAM®

TECHNOLOGIES

Woofer: SPL12
Enclosure Type: Sealed Bandpass #53
Music Type: Very high output for Rock or Rap

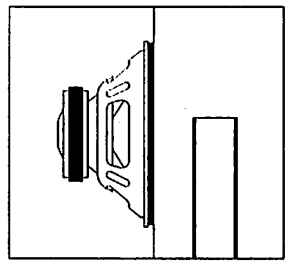

3.11 cu. ft. o.d.

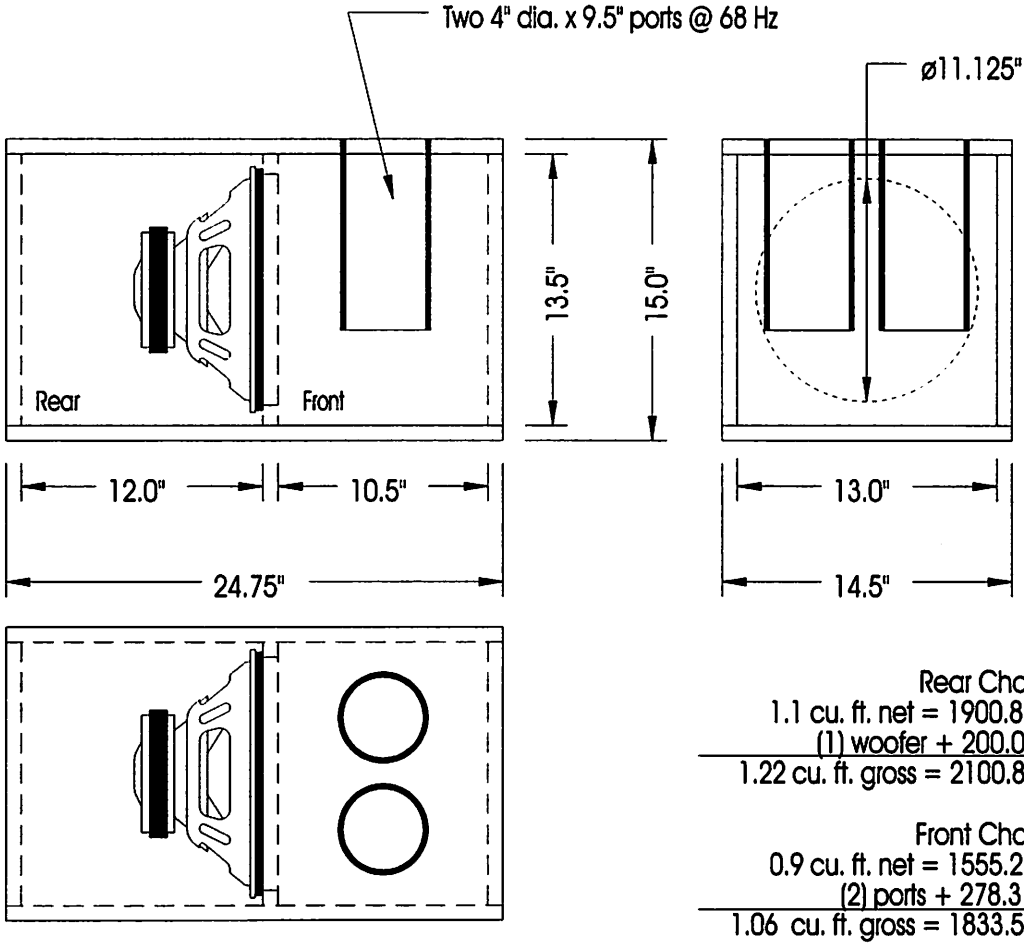

Rear Chamber:
1.1 cu. ft. net = 1900.8 cu. in.
(1) woofer + 200.0 cu. in.
1.22 cu. ft. gross = 2100.8 cu. in.

Front Chamber:
0.9 cu. ft. net = 1555.2 cu. in.
(2) ports + 278.3 cu. in.
1.06 cu. ft. gross = 1833.5 cu. in.

NOTE: Line all walls with 1" fiberglass insulation or similar material!

Predicted In-Car and Half-Space Anechoic Frequency Response

SOUNDSTREAM® TECHNOLOGIES
R & D Loudspeaker Performance Projection
SPL vs. Frequency (2.0 volts input / 1 meter)
Response includes 12 dB / Oct LP @ 100 Hz

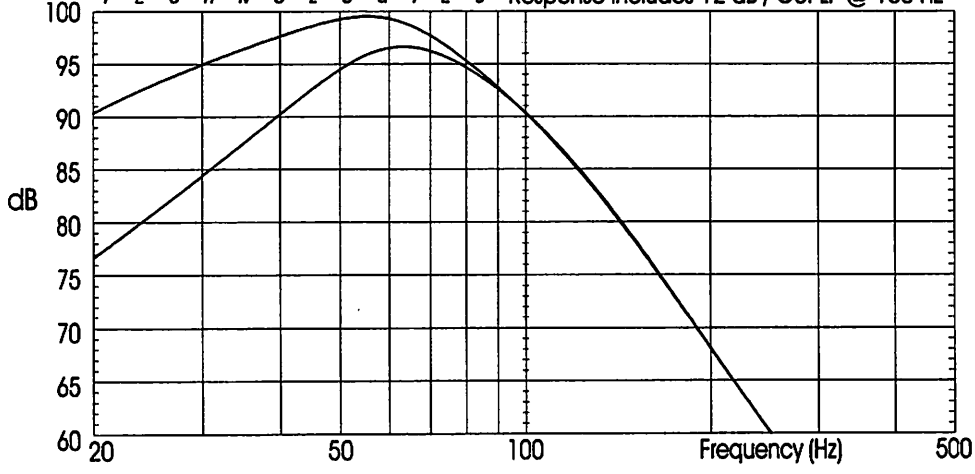

Application Notes:

CODE: SPL12EN6

SOUNDSTREAM®

TECHNOLOGIES

Woofer: SPL15
Enclosure Type: Sealed
Music Type: Great for high SPL, multiple driver applications

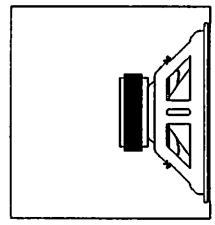

2.31 cu. ft. o.d.

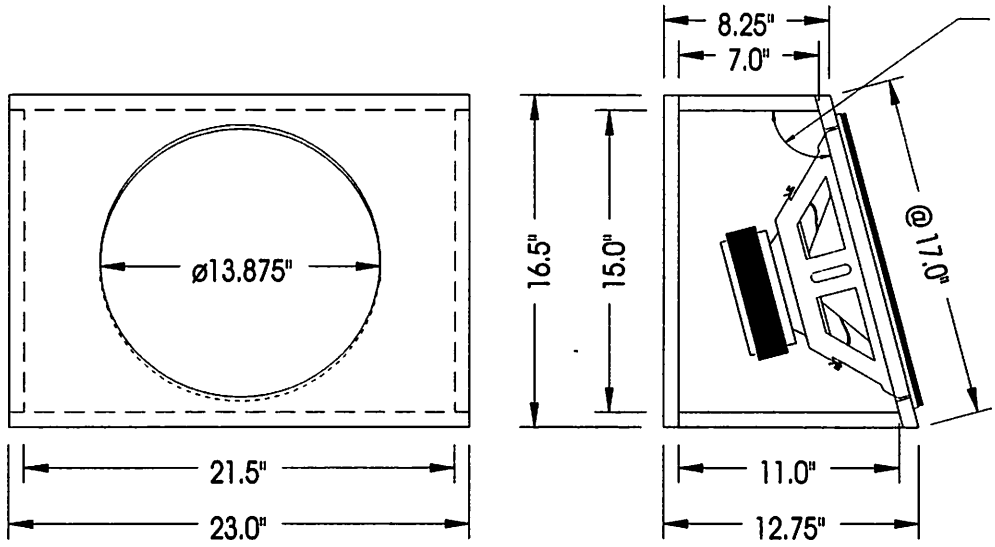

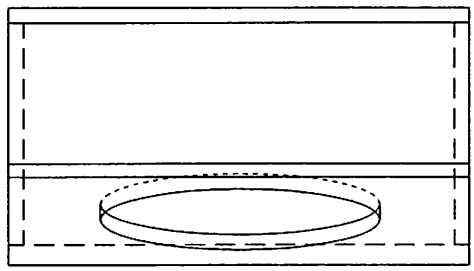

Enclosure Volume:

1.5 cu. ft. net = 2592.0 cu. in.
(1) woofer + 320.0 cu. in.
1.69 cu. ft. gross = 2912.0 cu. in.

NOTE: Line all walls with 1" fiberglass insulation or similar material!

Predicted In-Car and Half-Space Anechoic Frequency Response

SOUNDSTREAM® TECHNOLOGIES
R & D Loudspeaker Performance Projection
SPL vs. Frequency (2.0 volts input / 1 meter)
Response includes 12 dB / Oct LP @ 100 Hz

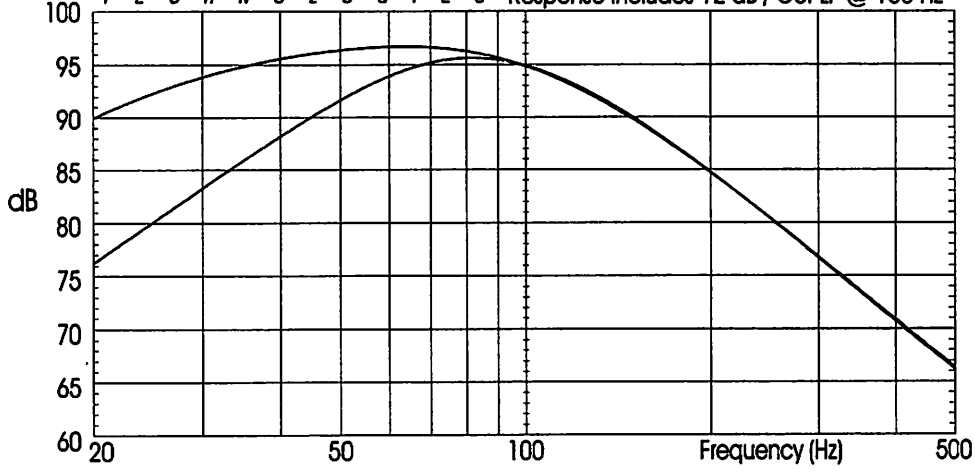

Application Notes:

CODE: SPL15EN1

SOUNDSTREAM®
TECHNOLOGIES

Woofer: SPL15
Enclosure Type: Sealed
Music Type: High output, excellent all around enclosure

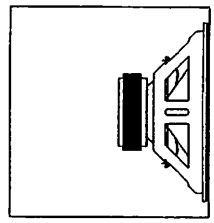

2.94 cu. ft. o.d.

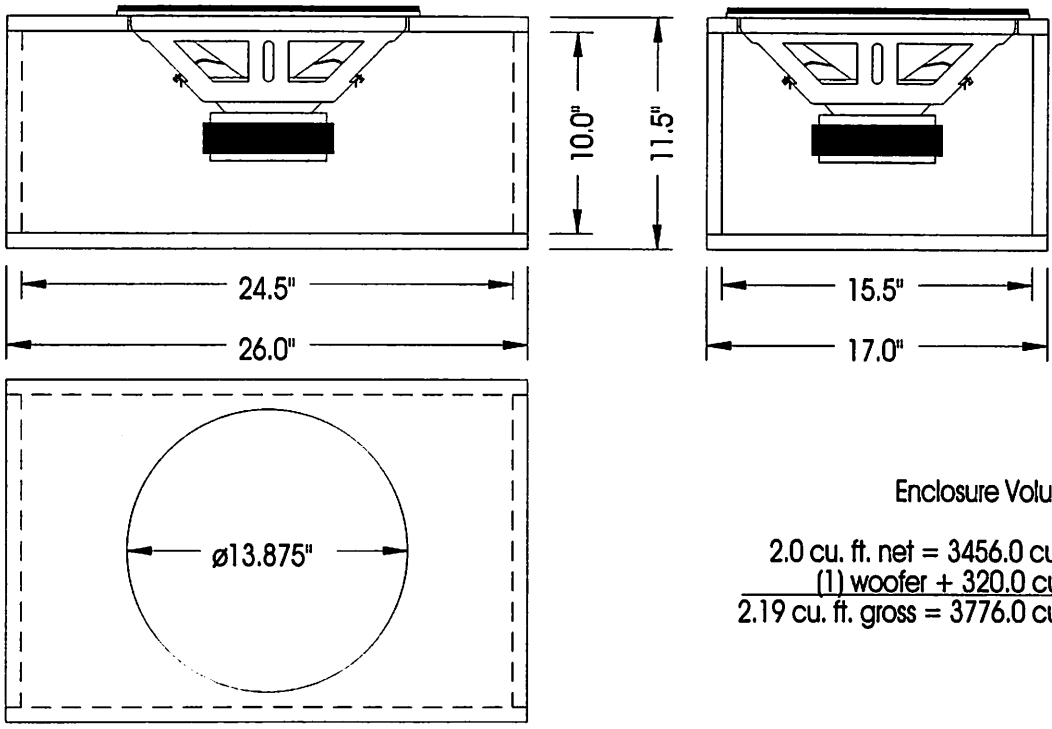

Enclosure Volume:

2.0 cu. ft. net = 3456.0 cu. in.
(1) woofer + 320.0 cu. in.
2.19 cu. ft. gross = 3776.0 cu. in.

NOTE: Line all walls with 1" fiberglass insulation or similar material!

Predicted In-Car and Half-Space Anechoic Frequency Response
SOUNDSTREAM® TECHNOLOGIES
R & D Loudspeaker Performance Projection
SPL vs. Frequency (2.0 volts input / 1 meter)
Response includes 12 dB / Oct LP @ 100 Hz

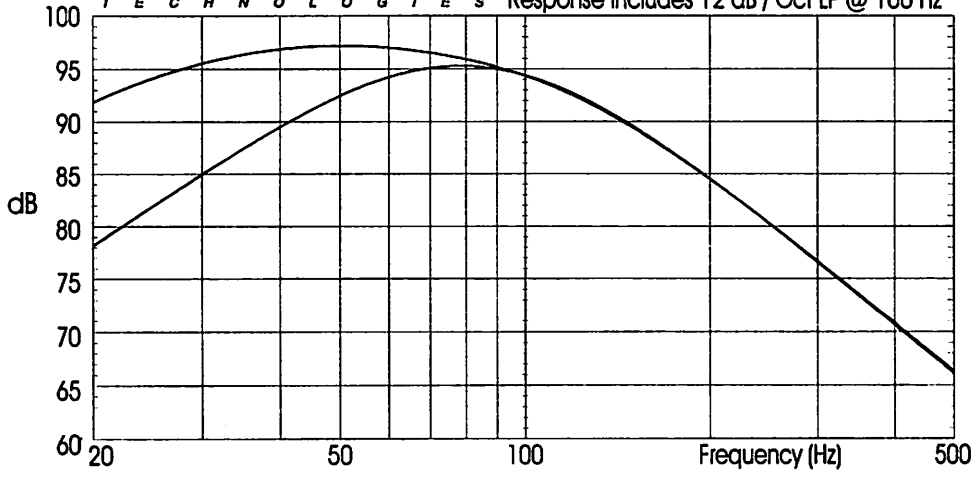

Application Notes:

CODE: SPL15EN2

SOUNDSTREAM®
TECHNOLOGIES

Woofer: SPL15
Enclosure Type: Vented
Music Type: High output with good low frequency extension

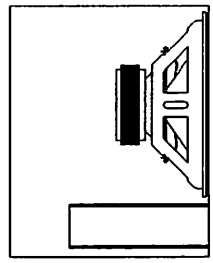

4.80 cu. ft. o.d.

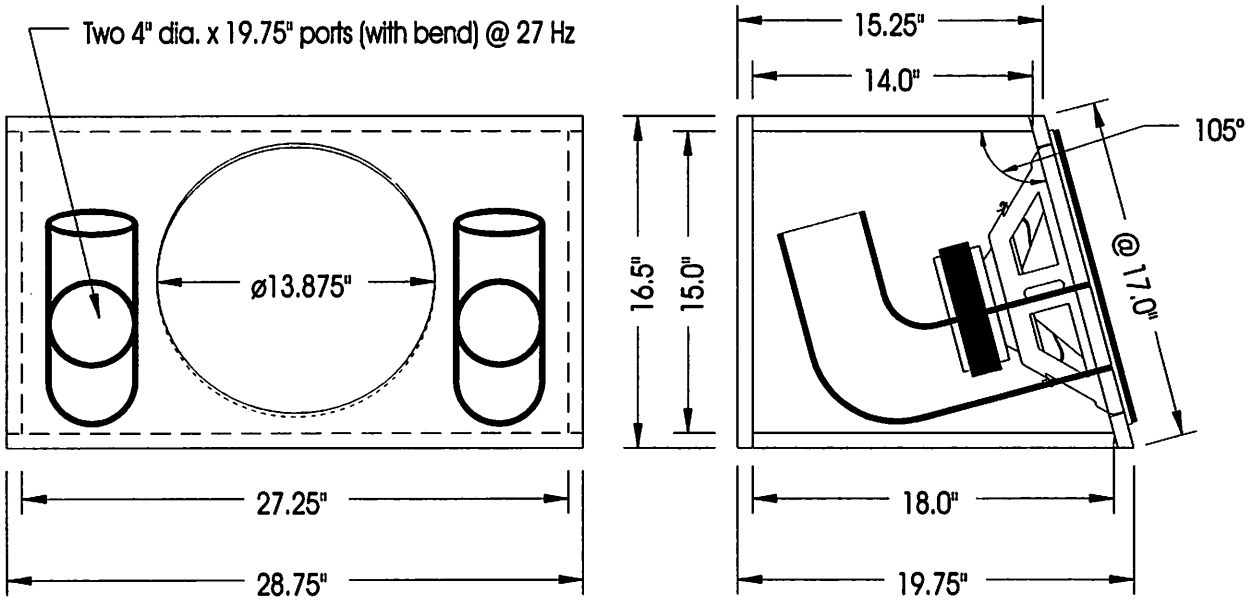

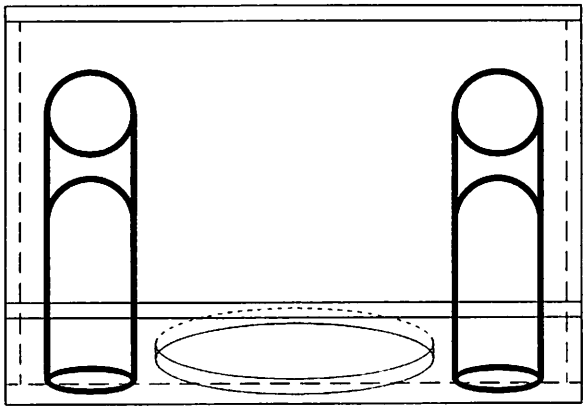

Enclosure Volume:

3.25 cu. ft. net = 5616.0 cu. in.
(2) ports + 604.2 cu. in.
(1) woofer + 320.0 cu. in.
3.78 cu. ft. gross = 6540.2 cu. in.

NOTE: Line all walls with 1" fiberglass insulation or similar material!

Predicted In-Car and Half-Space Anechoic Frequency Response

SOUNDSTREAM® TECHNOLOGIES
R & D Loudspeaker Performance Projection
SPL vs. Frequency (2.0 volts input / 1 meter)
Response includes 12 dB / Oct LP @ 100 Hz

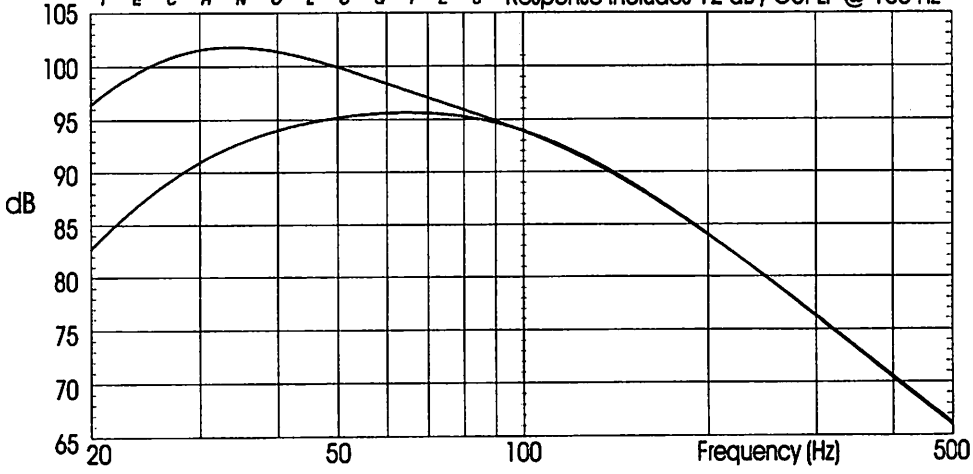

Application Notes:

- _____
- _____
- _____
- _____
- _____
- _____
- _____

CODE: SPL15EN3

SOUNDSTREAM®
TECHNOLOGIES

Woofer: SPL15
Enclosure Type: Vented
Music Type: Great for Rock music and home theater applications

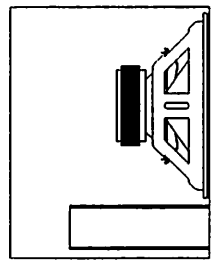

8.86 cu. ft. o.d.

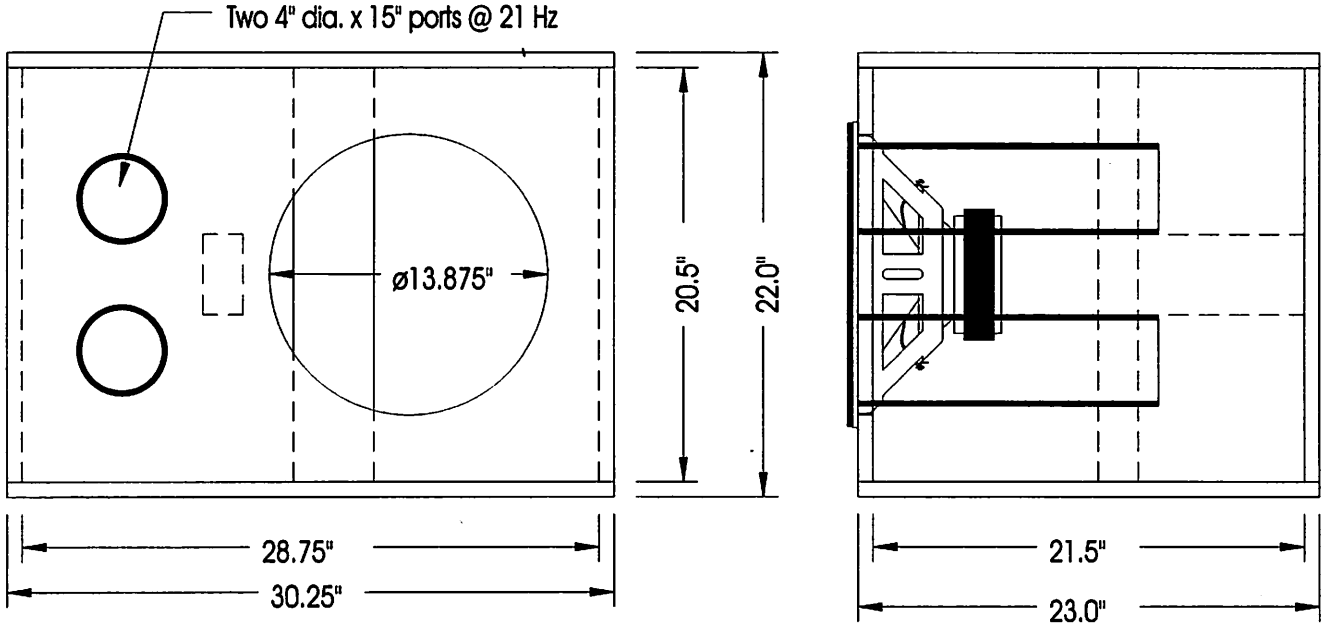

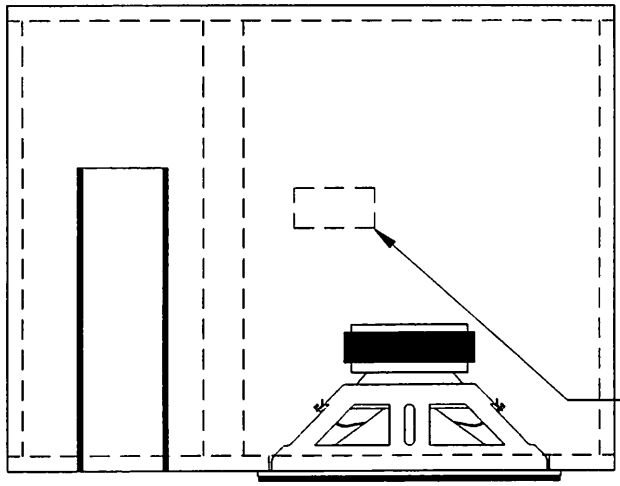

Enclosure Volume:

6.70 cu. ft. net = 11,577.6 cu. in.
(1) woofer + 320.0 cu. in.
(2) ports + 453.2 cu. in.
bracing + 336.0 cu. in.
7.34 cu. ft. gross = 12,686.8 cu. in.

NOTE: Line all walls with 1" fiberglass insulation or similar material!

Predicted In-Car and Half-Space Anechoic Frequency Response

SOUNDSTREAM® TECHNOLOGIES
R & D Loudspeaker Performance Projection
SPL vs. Frequency (2.0 volts input / 1 meter)
Response includes 12 dB / Oct LP @ 100 Hz

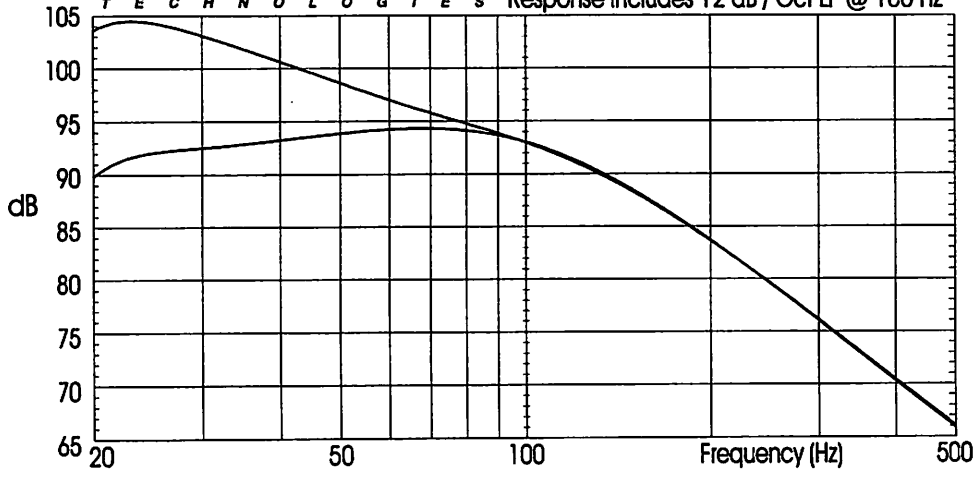

Application Notes:

- _____
- _____
- _____
- _____
- _____
- _____
- _____

CODE: SPL15EN4

SOUNDSTREAM®
TECHNOLOGIES

Woofer: SPL15
Enclosure Type: Sealed Bandpass #54
Music Type: High SPL for Rock or Rap

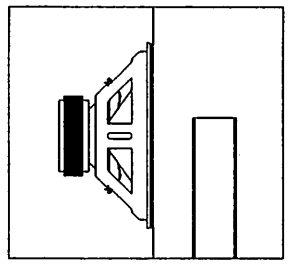

7.09 cu. ft. o.d.

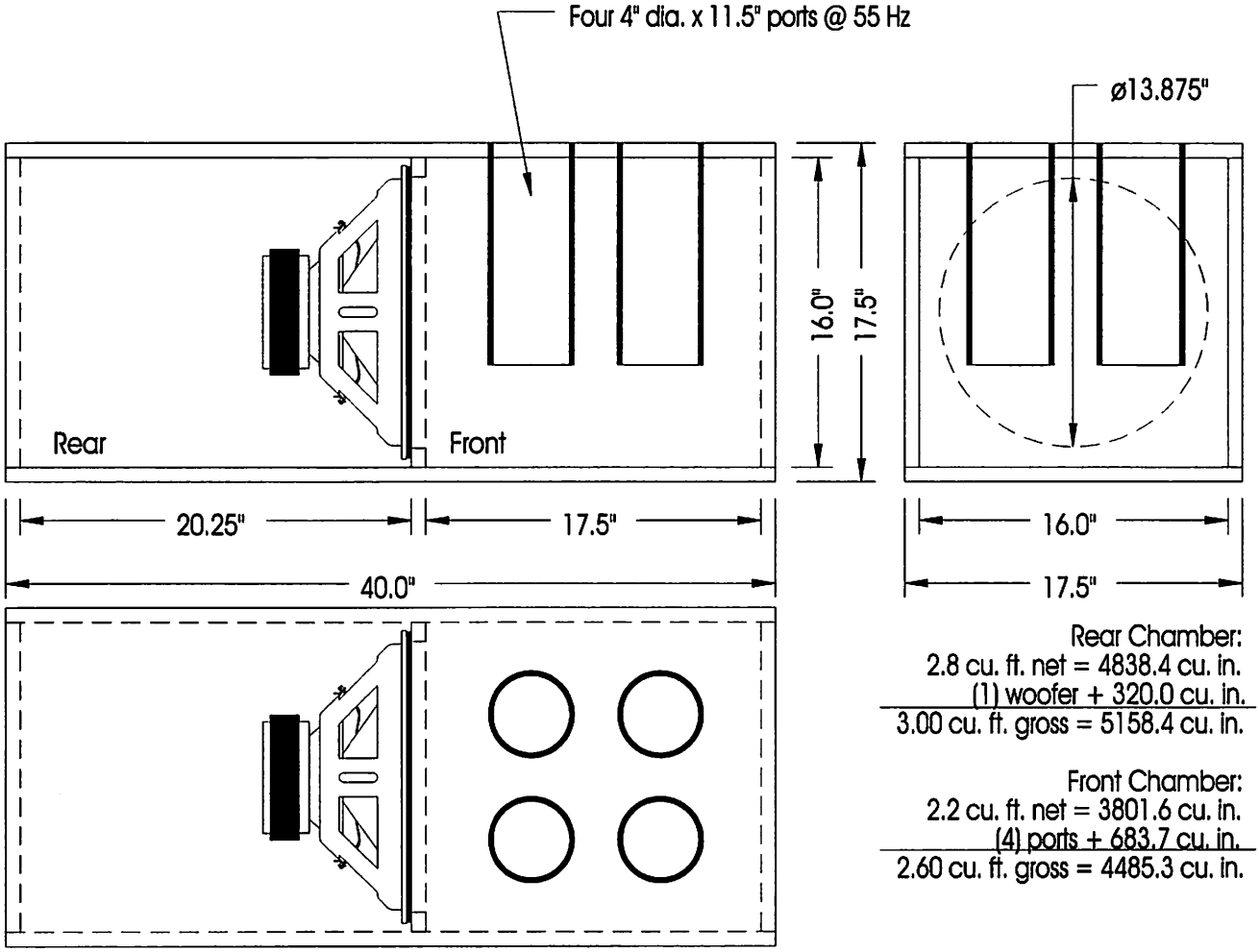

Rear Chamber:
2.8 cu. ft. net = 4838.4 cu. in.
(1) woofer + 320.0 cu. in.
3.00 cu. ft. gross = 5158.4 cu. in.

Front Chamber:
2.2 cu. ft. net = 3801.6 cu. in.
(4) ports + 683.7 cu. in.
2.60 cu. ft. gross = 4485.3 cu. in.

NOTE: Line all walls with 1" fiberglass insulation or similar material!

Predicted In-Car and Half-Space Anechoic Frequency Response
SOUNDSTREAM® TECHNOLOGIES
R & D Loudspeaker Performance Projection
SPL vs. Frequency (2.0 volts input / 1 meter)
Response includes 12 dB / Oct LP @ 100 Hz

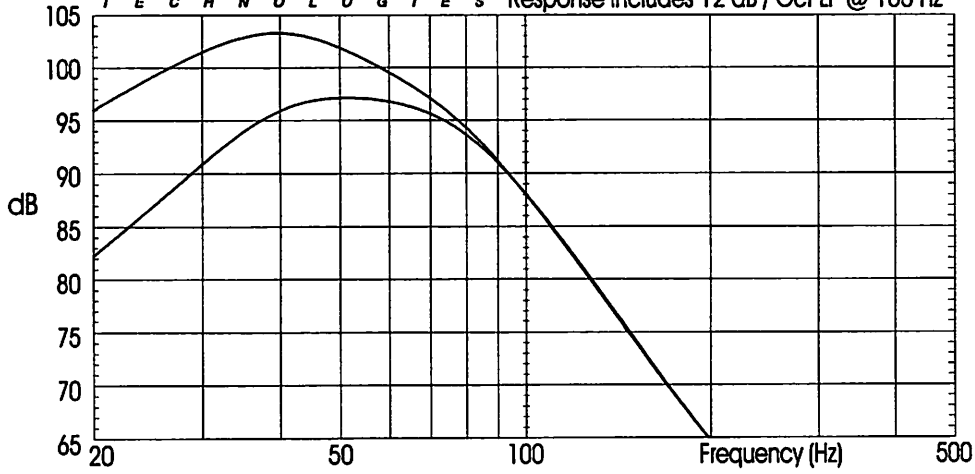

Application Notes:

- _____
- _____
- _____
- _____
- _____
- _____
- _____

CODE: SPL15EN5

SOUNDSTREAM®

TECHNOLOGIES

Woofer: SPL15
Enclosure Type: Sealed Bandpass #55
Music Type: Very high output for Rap music

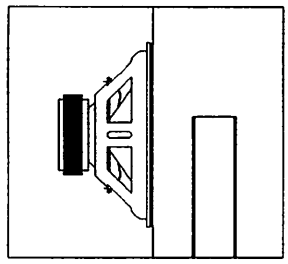

5.14 cu. ft. o.d.

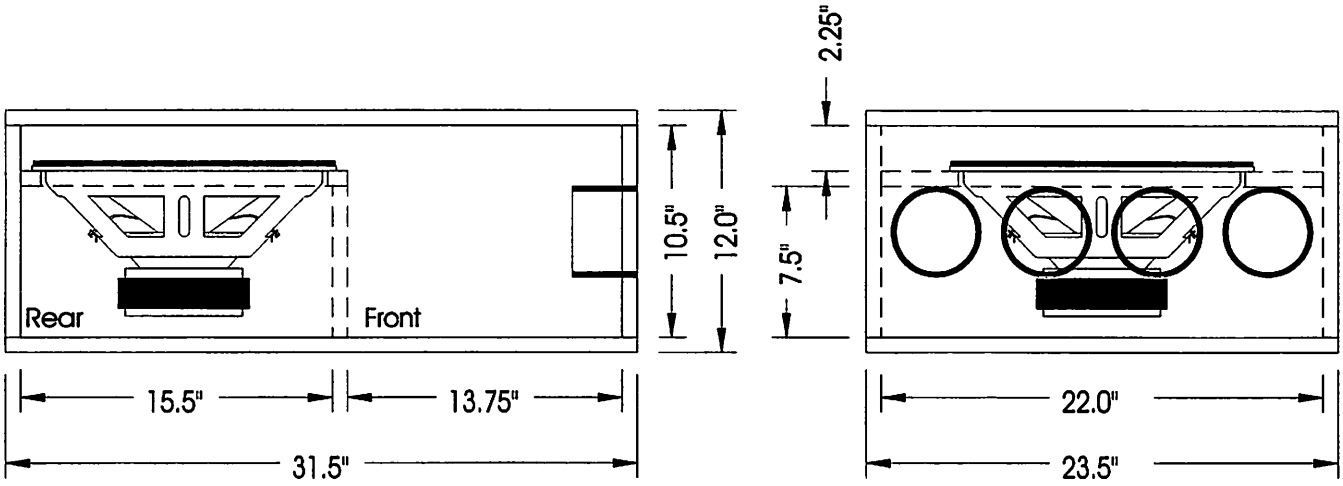

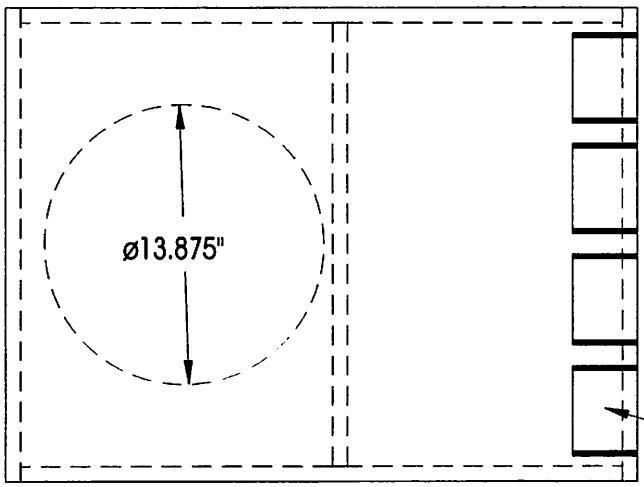

Rear Chamber:
1.3 cu. ft. net = 2246.4 cu. in.
(1) woofer + 320.0 cu. in.
1.49 cu. ft. gross = 2566.4 cu. in.

Front Chamber:
2.2 cu. ft. net = 3801.6 cu. in.
(4) ports + 159.0 cu. in.
2.29 cu. ft. gross = 3960.6 cu. in.

NOTE: Line all walls with 1" fiberglass insulation or similar material!

Predicted In-Car and Half-Space Anechoic Frequency Response

SOUNDSTREAM® TECHNOLOGIES
R & D Loudspeaker Performance Projection
SPL vs. Frequency (2.0 volts input / 1 meter)
Response includes 12 dB / Oct LP @ 100 Hz

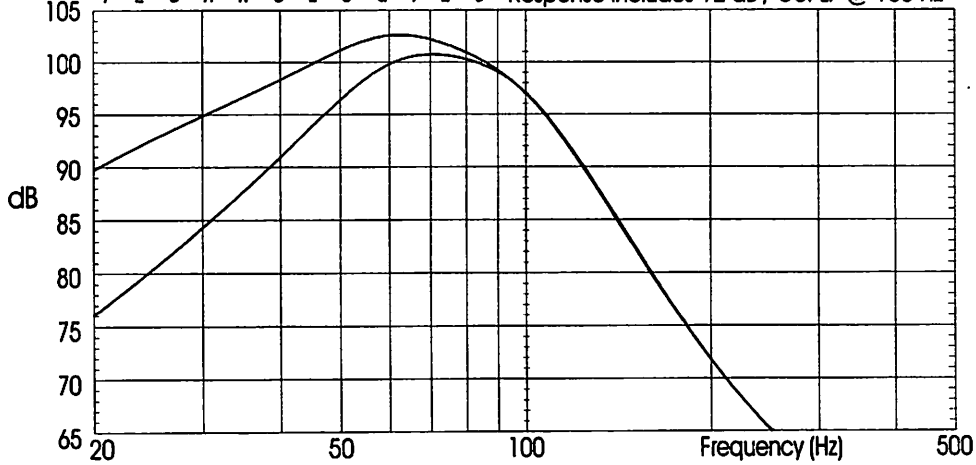

Application Notes:

-
-
-
-
-
-
-

CODE: SPL15EN6

SOUNDSTREAM®
TECHNOLOGIES

Woofer: SPL160
Enclosure Type: Sealed
Music Type: Excellent for high SPL, multiple driver applications

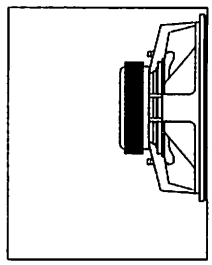

2.36 cu. ft. o.d.

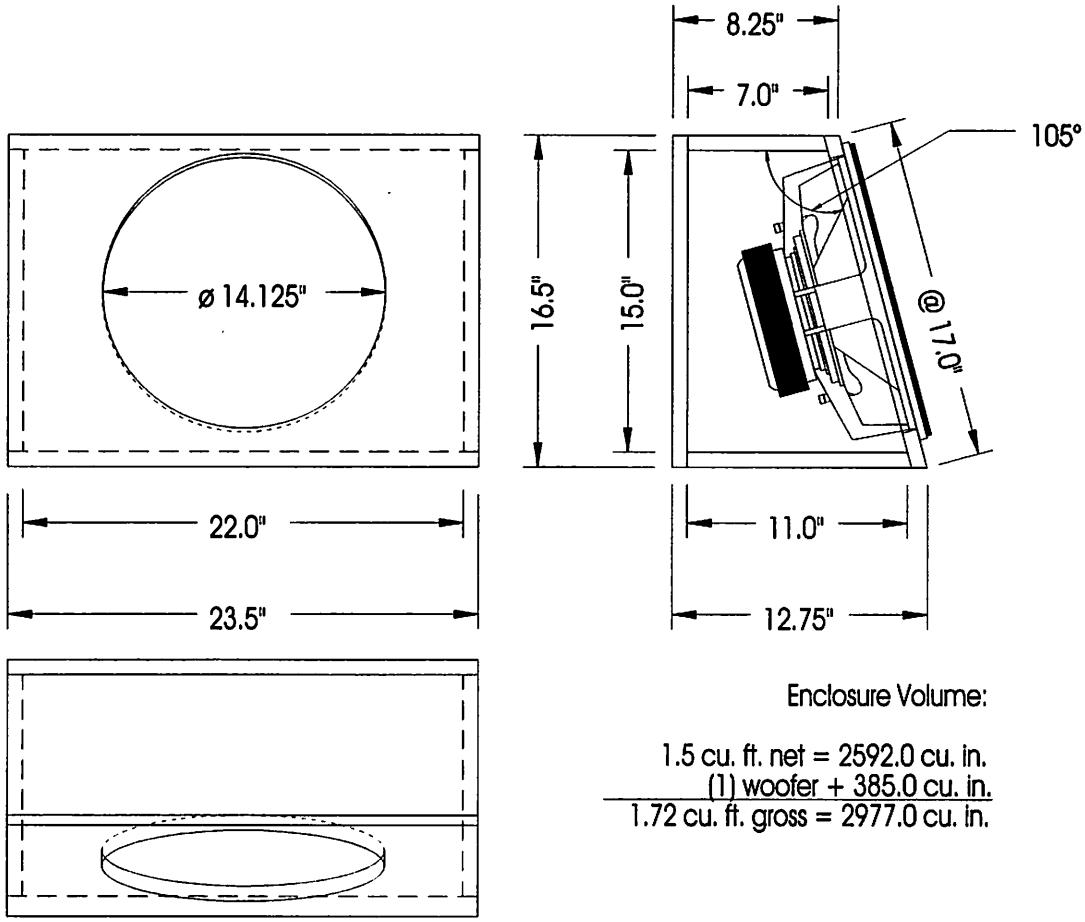

Enclosure Volume:

1.5 cu. ft. net = 2592.0 cu. in.
(1) woofer + 385.0 cu. in.
1.72 cu. ft. gross = 2977.0 cu. in.

NOTE: Line all walls with 1" fiberglass insulation or similar material!

Predicted In-Car and Half-Space Anechoic Frequency Response

SOUNDSTREAM® TECHNOLOGIES
R & D Loudspeaker Performance Projection
SPL vs. Frequency (2.0 volts input / 1 meter)
Response includes 12 dB / Oct LP @ 100 Hz

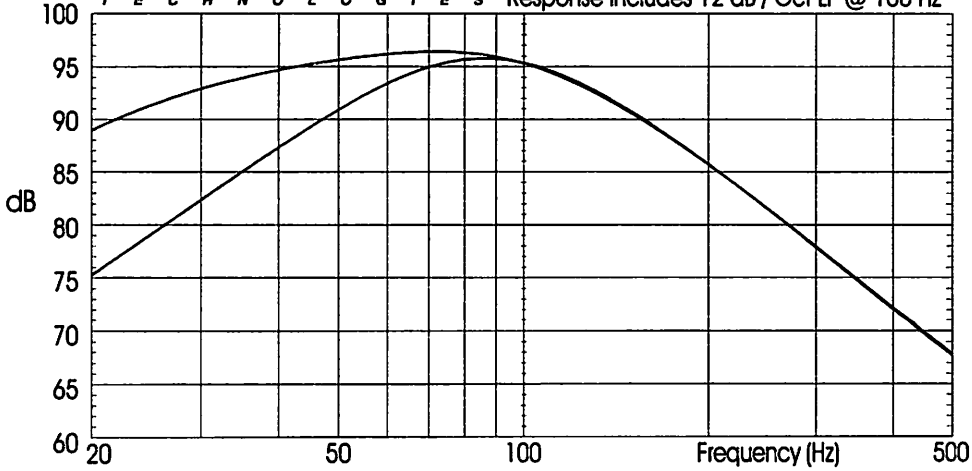

Application Notes:

CODE: SPL160EN1

SOUNDSTREAM®

TECHNOLOGIES

Woofer: SPL160
Enclosure Type: Sealed
Music Type: Excellent all around enclosure

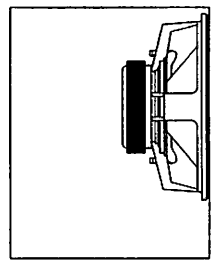

2.71 cu. ft. o.d.

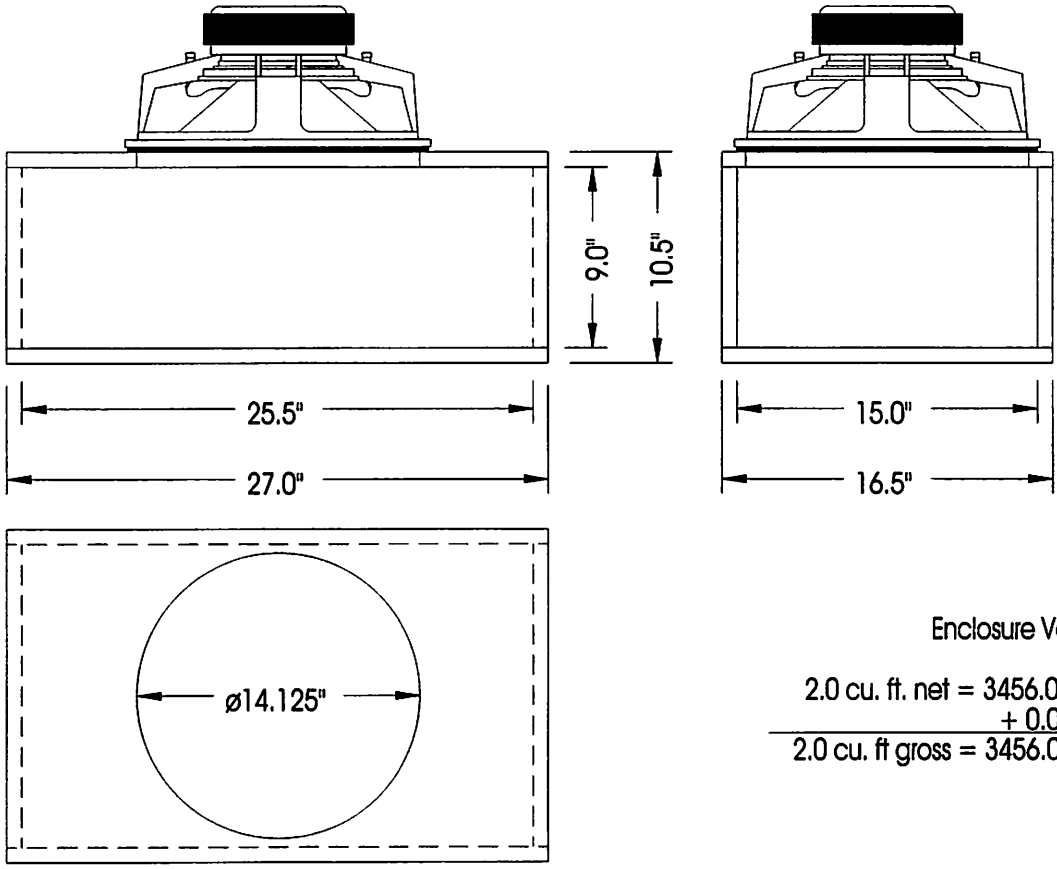

Enclosure Volume:

2.0 cu. ft. net = 3456.0 cu. in.
+ 0.0 cu. in.
2.0 cu. ft gross = 3456.0 cu. in.

NOTE: Line all walls with 1" fiberglass insulation or similar material!

Predicted In-Car and Half-Space Anechoic Frequency Response

SOUNDSTREAM® TECHNOLOGIES

R & D Loudspeaker Performance Projection
SPL vs. Frequency (2.0 volts input / 1 meter)
Response includes 12 dB / Oct LP @ 100 Hz

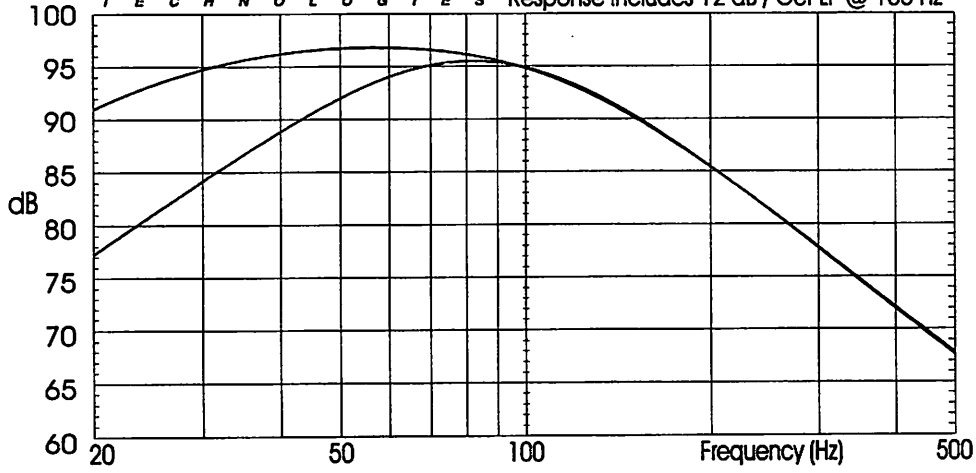

Application Notes:

CODE: SPL160EN2

SOUNDSTREAM®
TECHNOLOGIES

Woofer: SPL160
Enclosure Type: Vented
Music Type: Good small enclosure

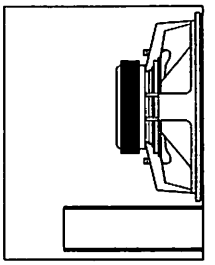

4.65 cu. ft. o.d.

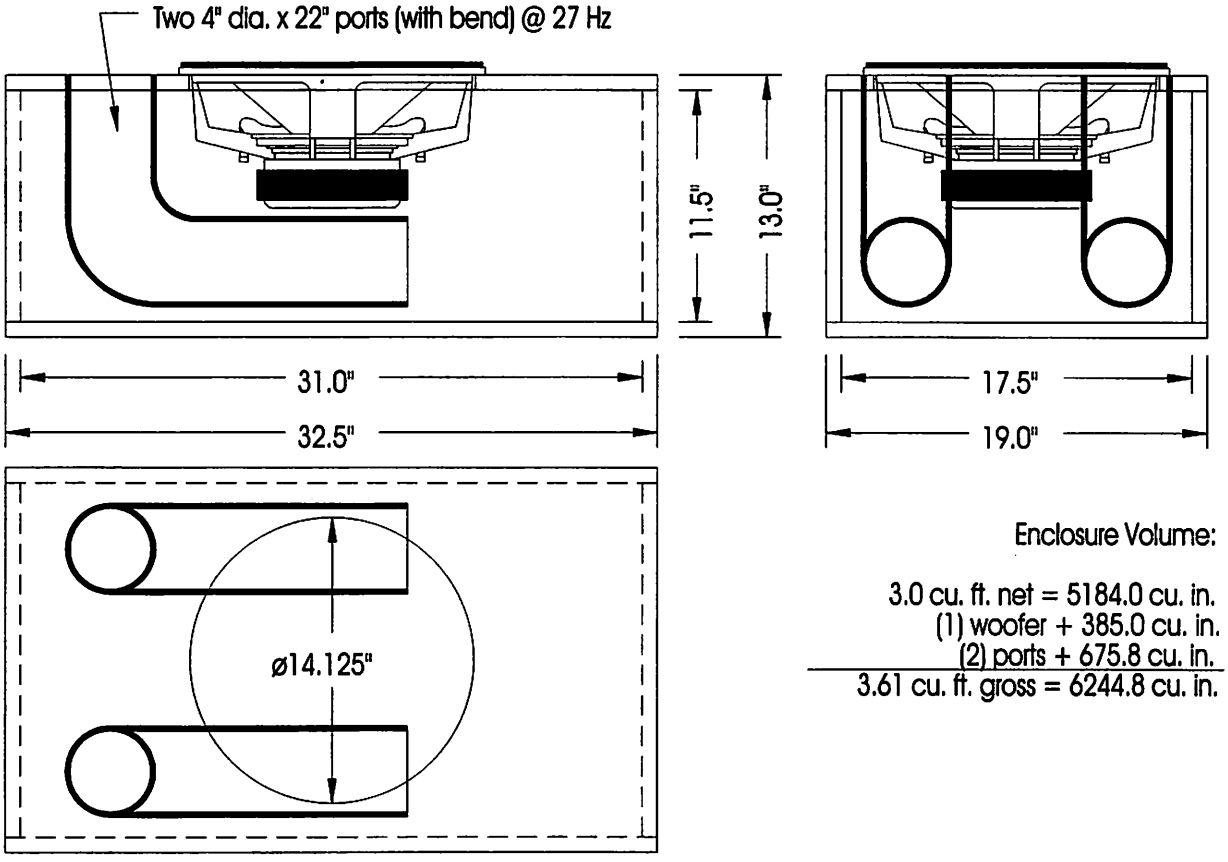

Enclosure Volume:

3.0 cu. ft. net = 5184.0 cu. in.
(1) woofer + 385.0 cu. in.
(2) ports + 675.8 cu. in.
3.61 cu. ft. gross = 6244.8 cu. in.

NOTE: Line all walls with 1" fiberglass insulation or similar material!

Predicted In-Car and Half-Space Anechoic Frequency Response

SOUNDSTREAM® TECHNOLOGIES
R & D Loudspeaker Performance Projection
SPL vs. Frequency (2.0 volts input / 1 meter)
Response includes 12 dB / Oct LP @ 100 Hz

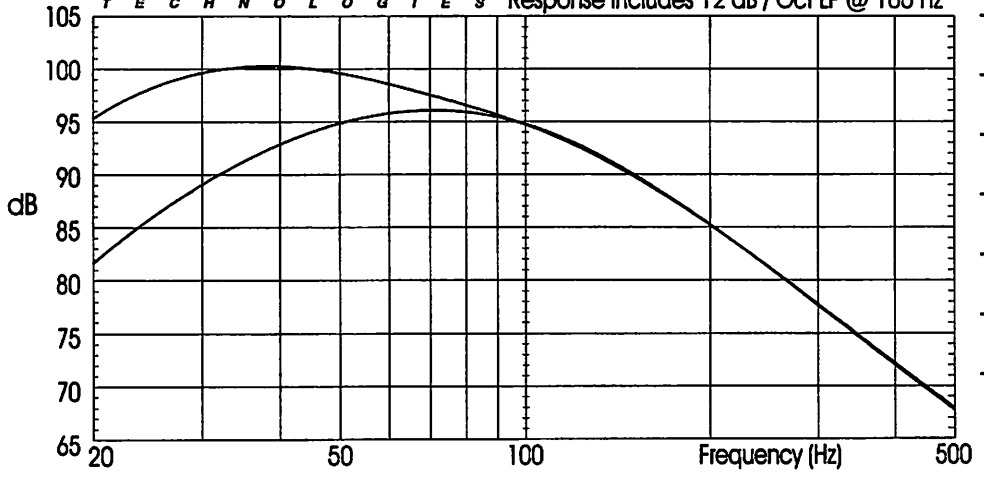

Application Notes:

CODE: SPL160EN3

SOUNDSTREAM®

TECHNOLOGIES

Woofer: SPL160

Enclosure Type: Vented

Music Type: Great for Rock and home theater applications

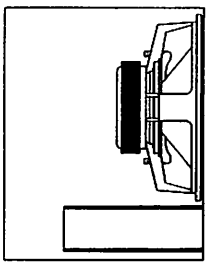

5.50 cu. ft. o.d.

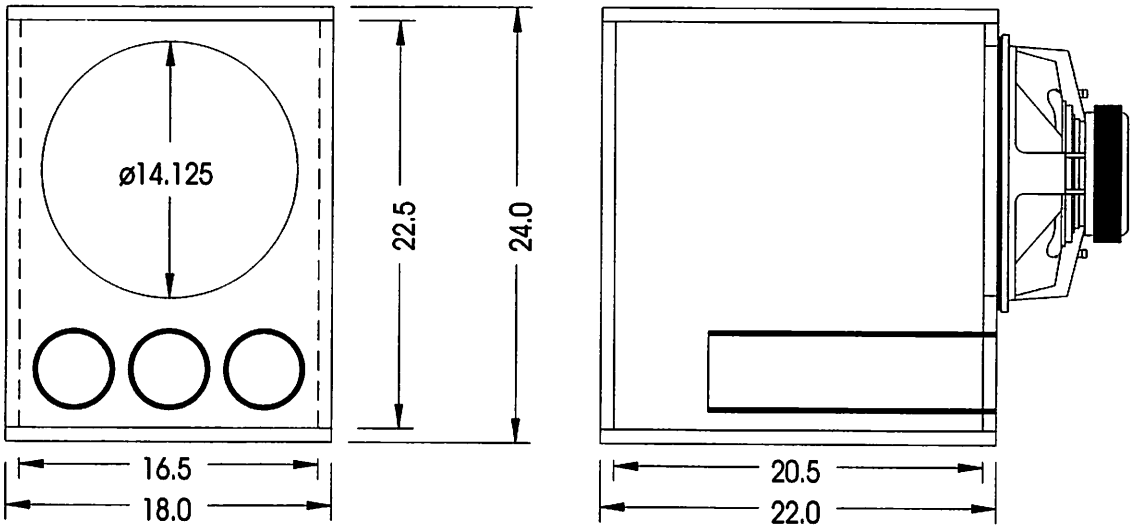

Enclosure Volume:

4.0 cu. ft. net = 6912.0 cu. in.
(3) ports + 727.4 cu. in.
4.42 cu. ft. gross = 7639.4 cu. in.

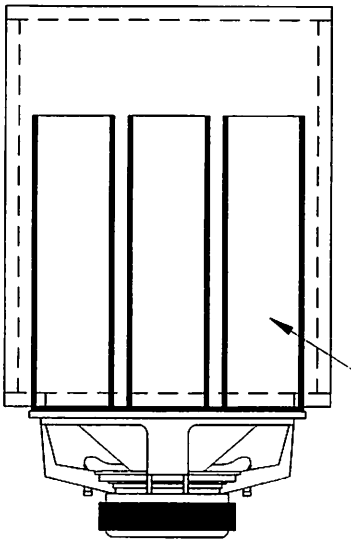

NOTE: Line all walls with 1" fiberglass insulation or similar material!

Three 4" dia. x 16" ports @ 32 Hz

Predicted In-Car and Half-Space Anechoic Frequency Response

SOUNDSTREAM® TECHNOLOGIES R & D Loudspeaker Performance Projection
SPL vs. Frequency (2.0 volts input / 1 meter)
Response includes 12 dB / Oct LP @ 100 Hz

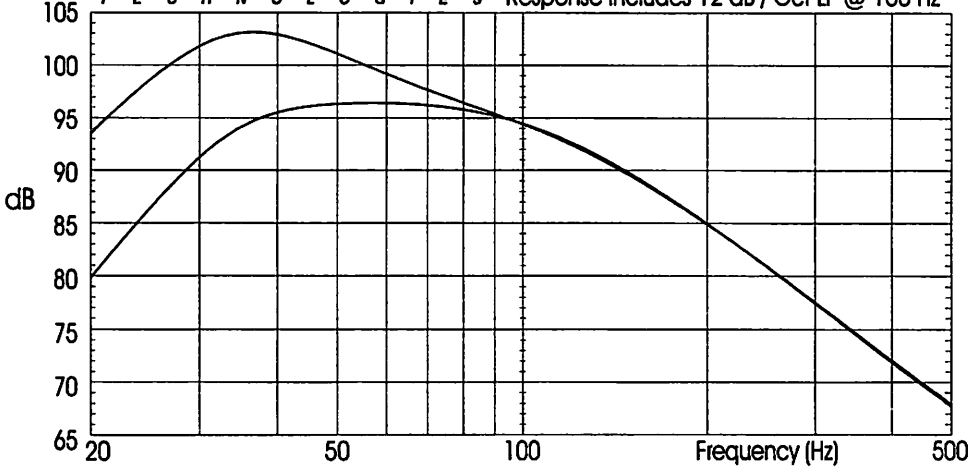

Application Notes:

CODE: SPL160EN4

SOUNDSTREAM®

TECHNOLOGIES

Woofer: SPL160
Enclosure Type: Sealed Bandpass #56
Music Type: High SPL for Rock or Rap music

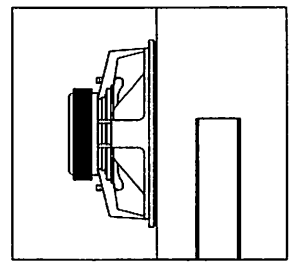

10.87 cu. ft. o.d.

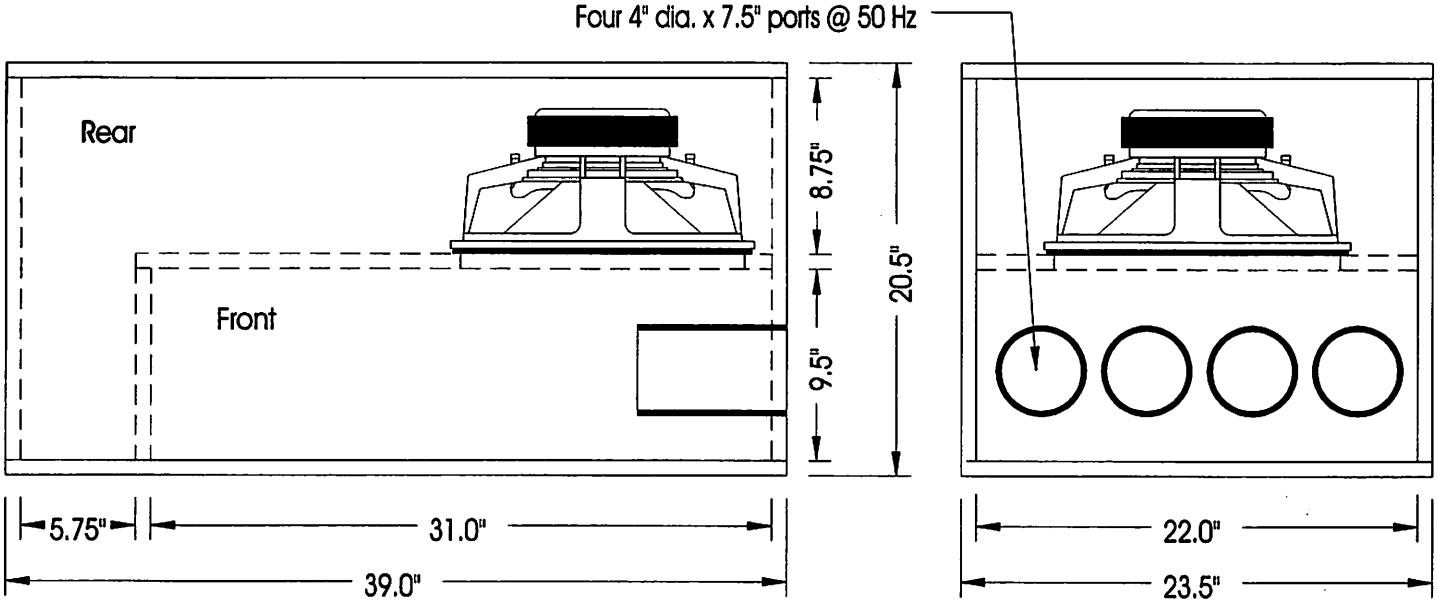

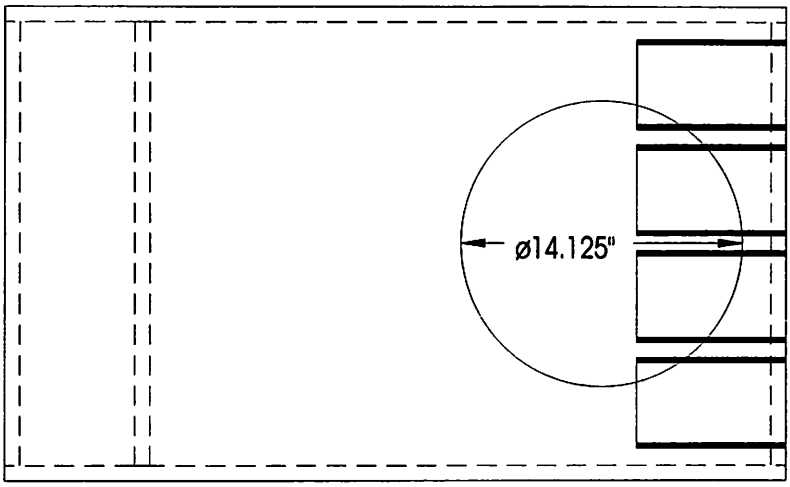

Rear Chamber:
4.7 cu. ft. net = 8121.6 cu. in.
(1) woofer + 385.0 cu. in.
4.92 cu. ft. gross = 8506.6 cu. in.

Front Chamber:
3.5 cu. ft. net = 6048.0 cu. in.
(4) ports + 429.3 cu. in.
3.75 cu. ft. gross = 6477.3 cu. in.

NOTE: Line all walls with 1" fiberglass insulation or similar material!

Predicted In-Car and Half-Space Anechoic Frequency Response

SOUNDSTREAM® TECHNOLOGIES

R & D Loudspeaker Performance Projection
SPL vs. Frequency (2.0 volts input / 1 meter)
Response includes 12 dB / Oct LP @ 100 Hz

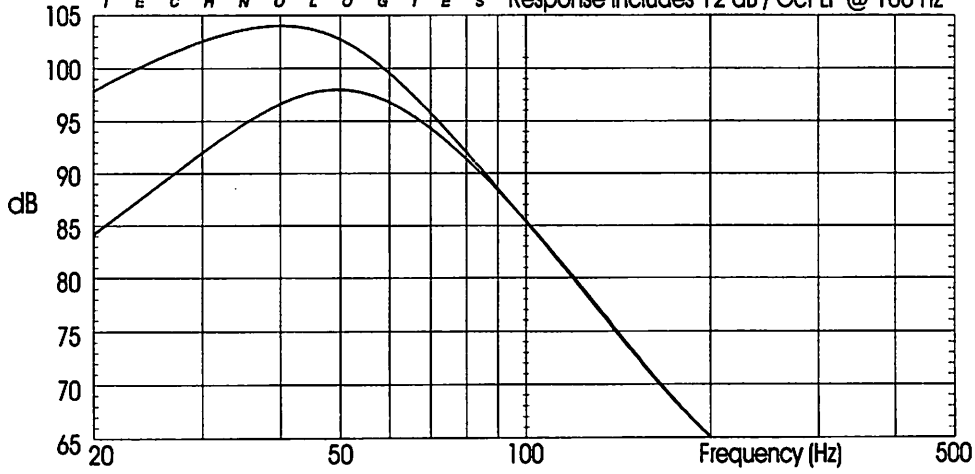

Application Notes:

- _____
- _____
- _____
- _____
- _____
- _____
- _____

CODE: SPL160EN5

SOUNDSTREAM®
TECHNOLOGIES

Woofer: SPL160
Enclosure Type: Sealed Bandpass #57
Music Type: Very high SPL for Rock or Rap

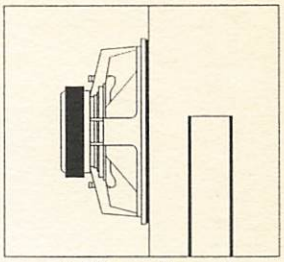

6.89 cu. ft. o.d.

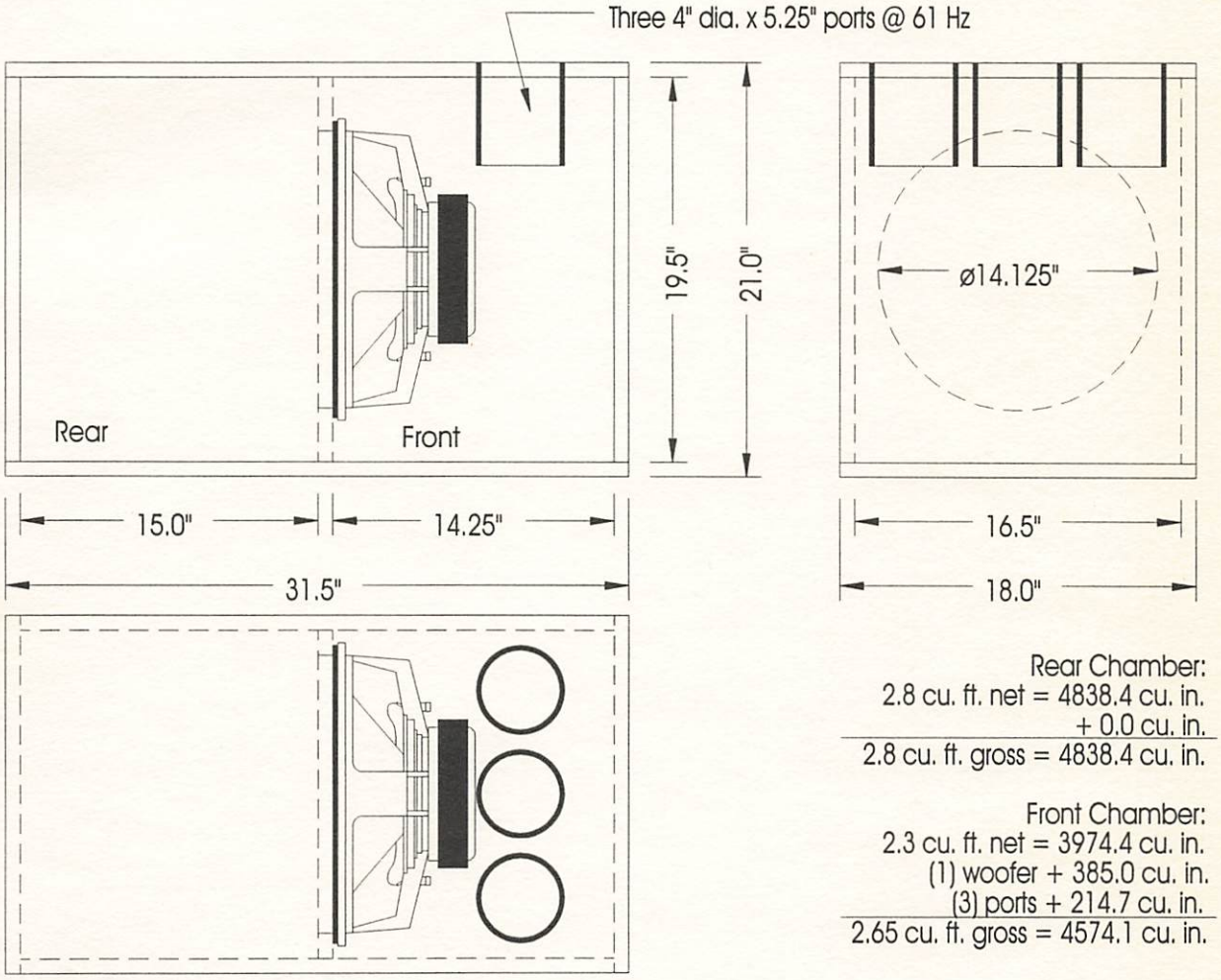

Rear Chamber:
2.8 cu. ft. net = 4838.4 cu. in.
+ 0.0 cu. in.
2.8 cu. ft. gross = 4838.4 cu. in.

Front Chamber:
2.3 cu. ft. net = 3974.4 cu. in.
(1) woofer + 385.0 cu. in.
(3) ports + 214.7 cu. in.
2.65 cu. ft. gross = 4574.1 cu. in.

NOTE: Line all walls with 1" fiberglass insulation or similar material!

Predicted In-Car and Half-Space Anechoic Frequency Response
SOUNDSTREAM® TECHNOLOGIES
R & D Loudspeaker Performance Projection
SPL vs. Frequency (2.0 volts input / 1 meter)
Response includes 12 dB / Oct LP @ 100 Hz

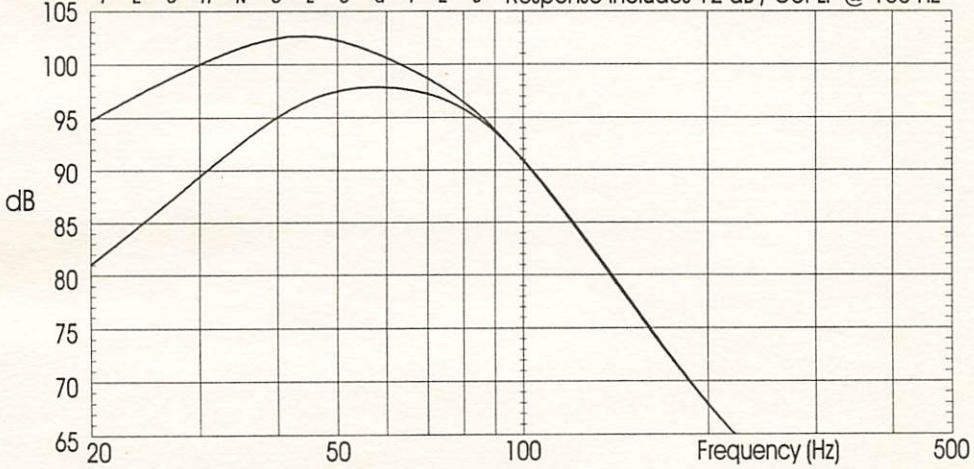

Application Notes:

- _____
- _____
- _____
- _____
- _____
- _____
- _____

CODE: SPL160EN6

SOUNDSTREAM®

TECHNOLOGIES

Woofer: SPL160
Enclosure Type: Sealed Bandpass #58
Music Type: Super high SPL for Rap music

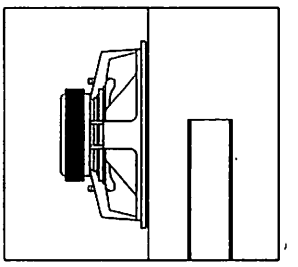

5.54 cu. ft. o.d.

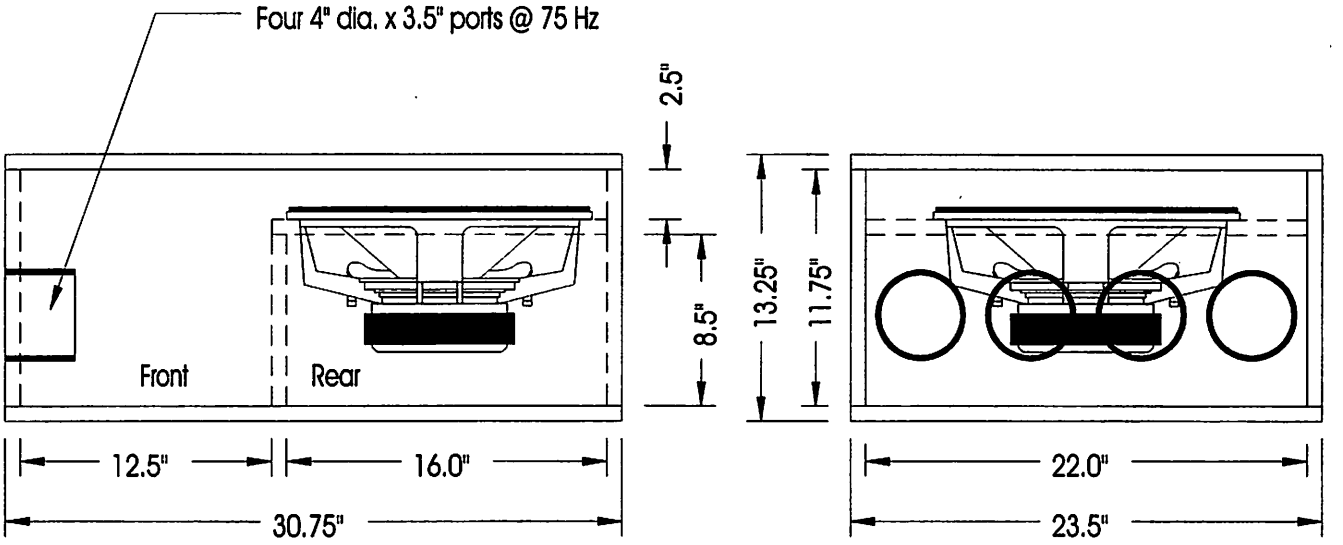

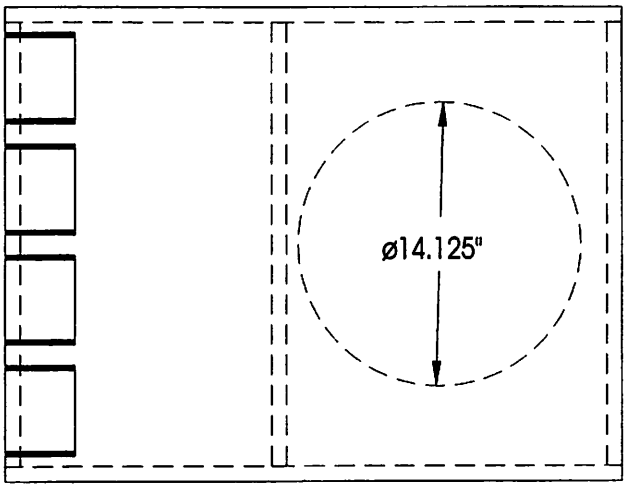

Rear Chamber:
1.5 cu. ft. net = 2592.0 cu. in.
(1) woofer + 385.0 cu. in.
1.72 cu. ft. gross = 2977.0 cu. in.

Front Chamber:
2.3 cu. ft. net = 3974.4 cu. in.
(4) ports + 174.9 cu. in.
2.40 cu. ft. gross = 4149.3 cu. in.

NOTE: Line all walls with fiberglass insulation or similar material!

Predicted In-Car and Half-Space Anechoic Frequency Response

SOUNDSTREAM® TECHNOLOGIES

R & D Loudspeaker Performance Projection
SPL vs. Frequency (2.0 volts input / 1 meter)
Response includes 12 dB / Oct LP @ 100 Hz

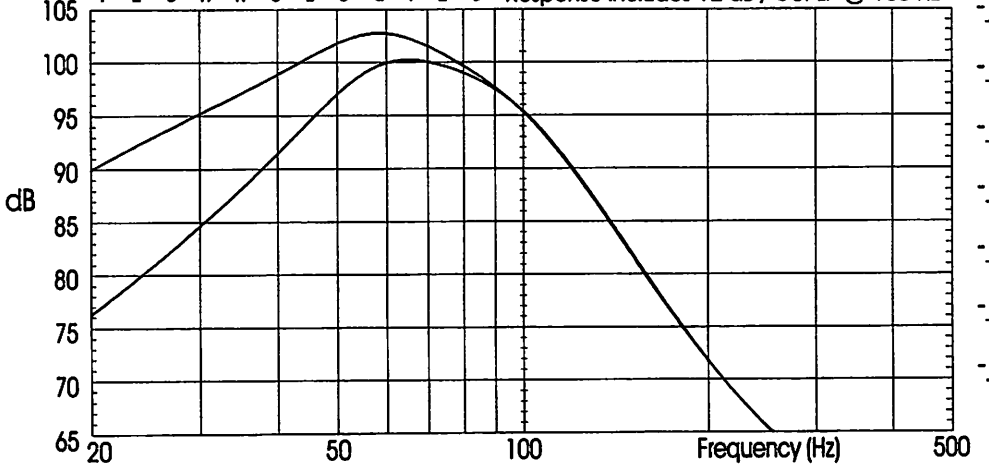

Application Notes:

CODE: SPL160EN7

SOUNDSTREAM®
TECHNOLOGIES

BIBLIOGRAPHY AND SUGGESTED READING

1. V. Dickason, *The Loudspeaker Design Cookbook,* 1988. Marshall Jones.
2. M. Colloms, *High Performance Loudspeakers,* 1985. Halsted Press.
3. D. Weems, *How To Design and Test Complete Speaker Systems,* 1980. TAB Books.
4. A. Badmaieff and D. Davis, *How To Build Speaker Enclosures,* 1985. Howard Sams.
5. P. Giddings, *Audio System Design and Installation,* 1990. Howard Sams.
6. I. Asimov, *Understanding PHYSICS,* 1966. Dorset Press.
7. G. Davis and R. Jones, *Sound Reinforcement Handbook,* 1987. Yamaha Music Corp.
8. Various Authors, *LOUDSPEAKERS, An Anthology of Articles,* 1987. Audio Engineering Society.
9. Various Authors, *LOUDSPEAKERS, An Anthology of Articles,* 1984. Audio Engineering Society.
10. D. Davis, *Acoustical Tests and Measurements,* 1965. Howard Sams.
11. L. L. Beranek, *Acoustic Measurements,* 1949. John Wiley and Sons.